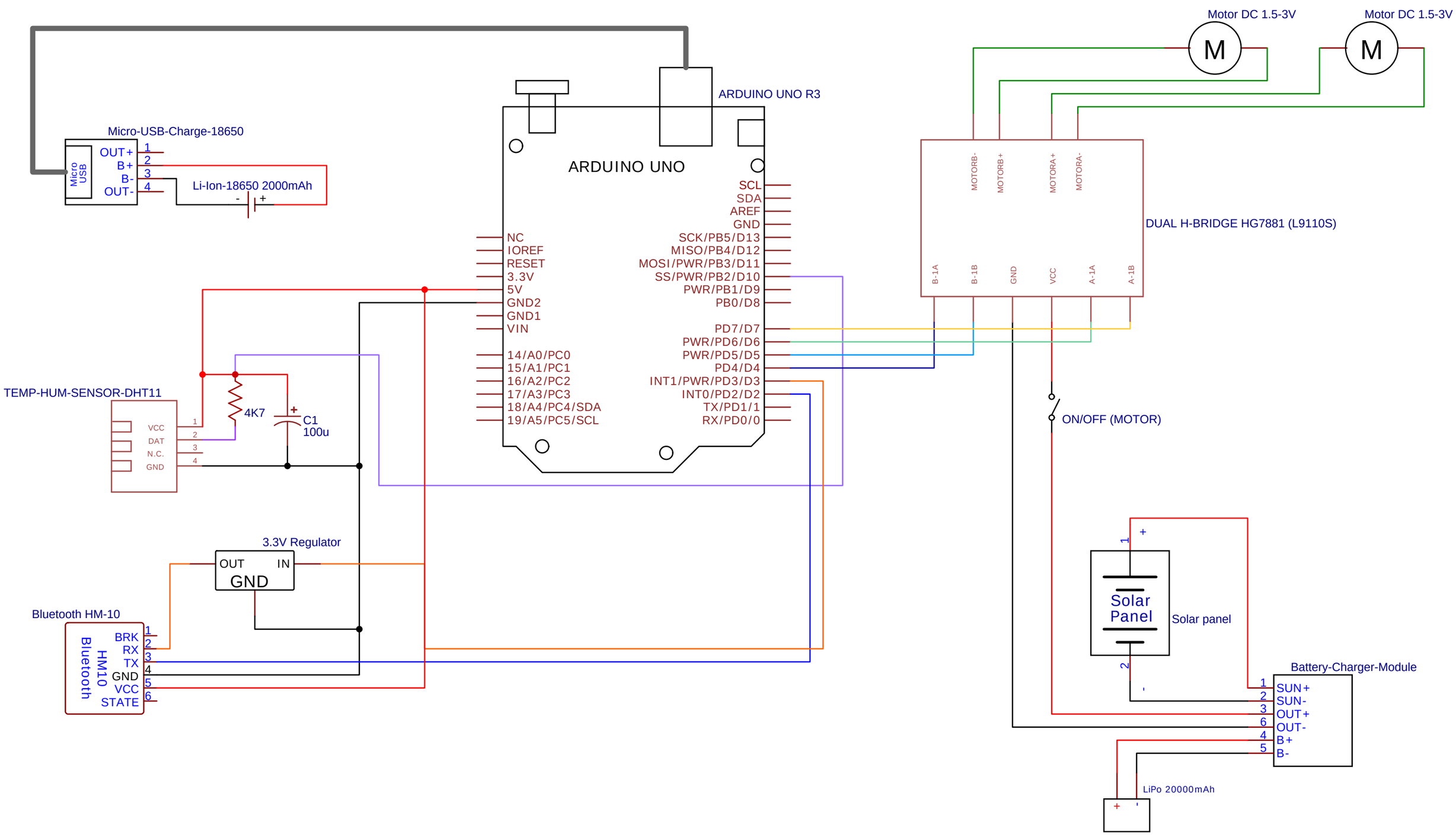

TITLE: Arduino Boat		REV: 1.0
	Company:	Sheet: 1/1
	Date: 2024-01-14 Drawn By: Matheus Pestana	