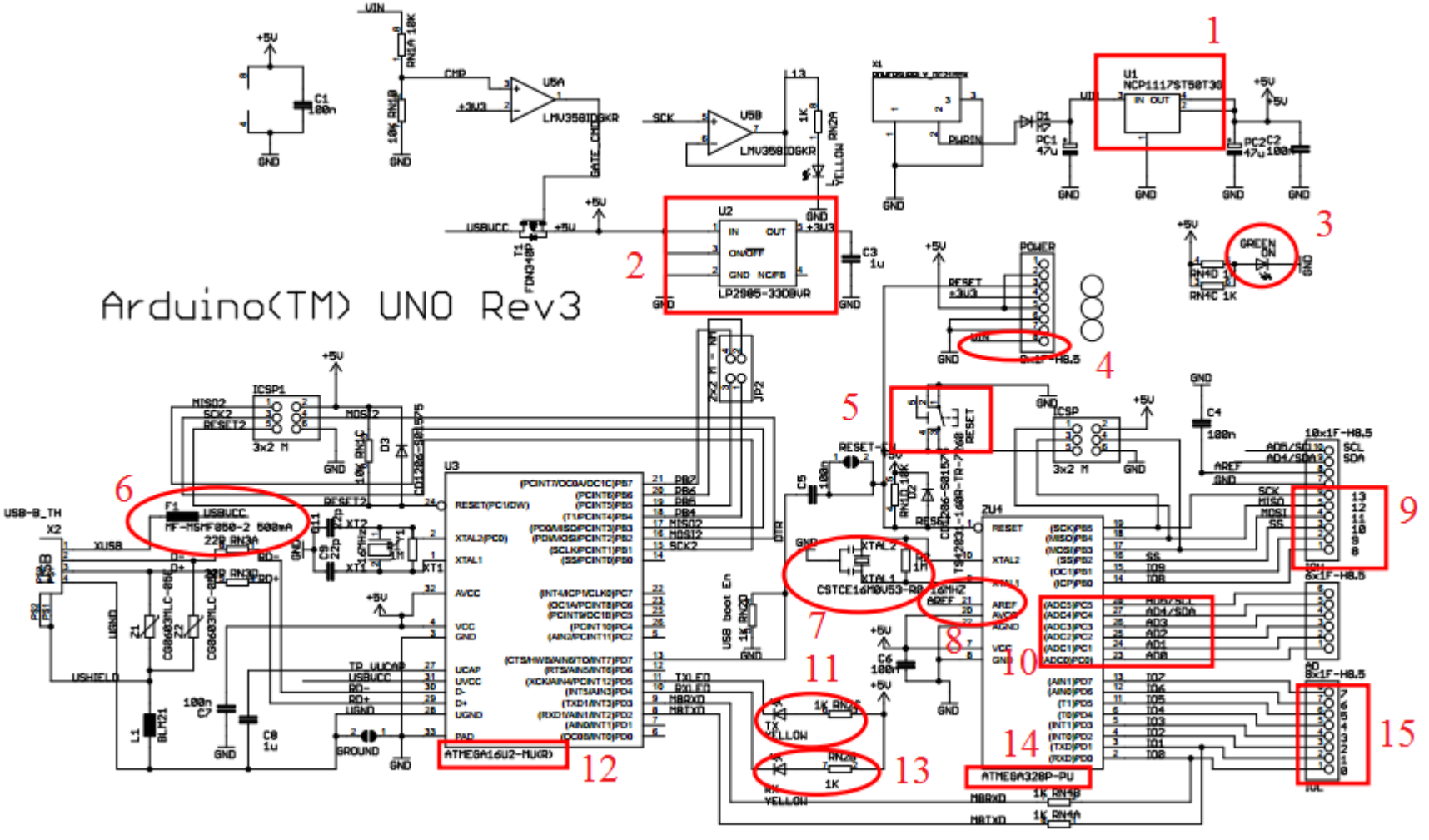
Arduino(TM) UNO Rev3
1
2
3
4
5
6
7
8
9
10
11
12
13
14
15
U1
NCP1117ST50T3G
U2
LP2985-33DBVR
U3
ATMEGA16U2-MU(R)
ATMEGA328P-PU
CSTCE16M0V53-R0
LMV358IDGKR
ICSP1
ICSP
POWER
USB-B_TH
USHIELD
GROUND
GREEN ON
RESET
USBUCC
TX YELLOW
RX YELLOW
YELLOW
MRXD
MTXD
SCL
SDA
AREF
GND
+5V
+3V3