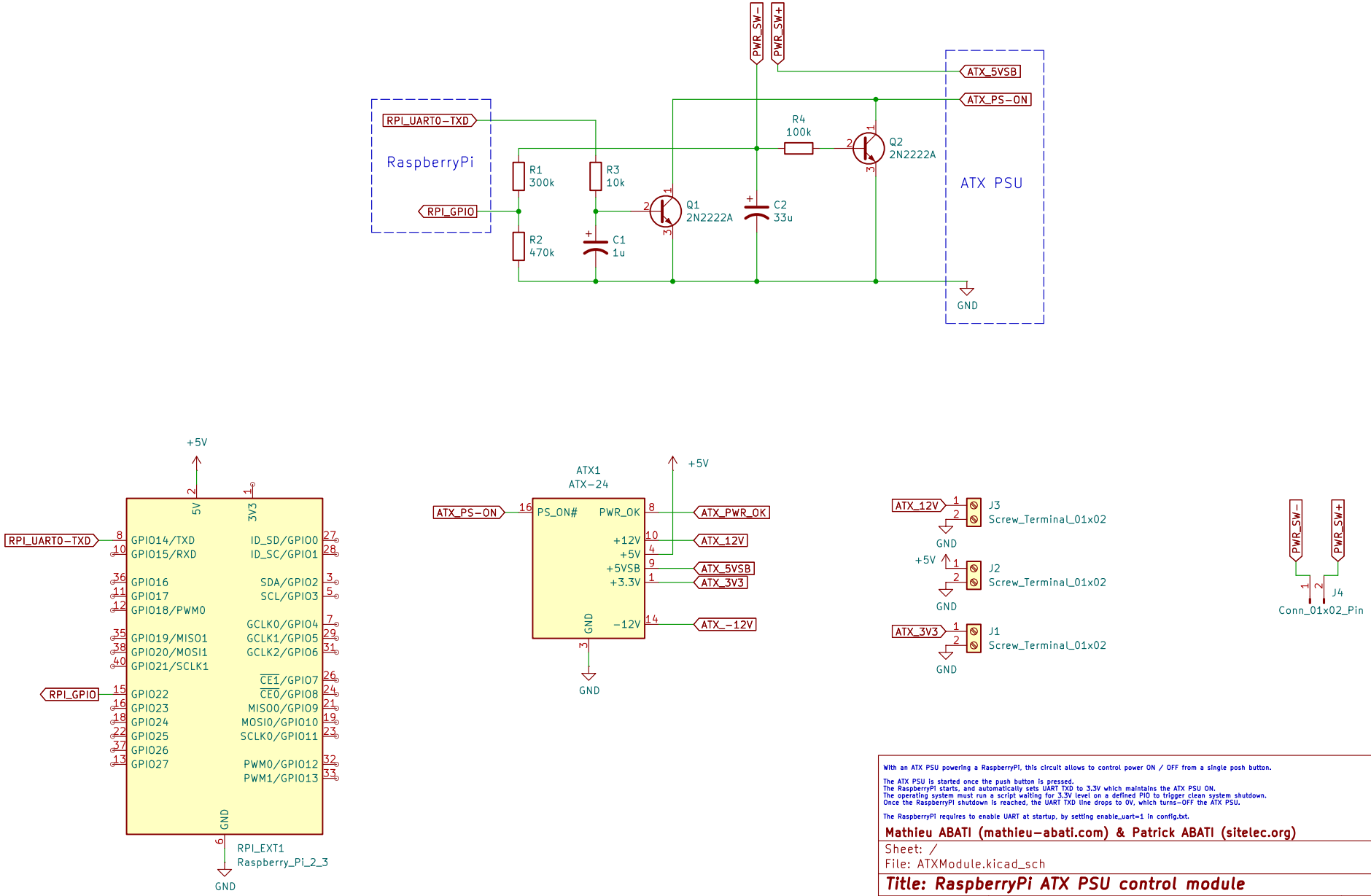

With an ATX PSU powering a RaspberryPi, this circuit allows to control power ON / OFF from a single posh button.

The ATX PSU is started once the push button is pressed.
The RaspberryPi starts, and automatically sets UART TXD to 3.3V which maintains the ATX PSU ON.
The operating system must run a script waiting for 3.3V level on a defined PIO to trigger clean system shutdown.
Once the RaspberryPi shutdown is reached, the UART TXD line drops to 0V, which turns-OFF the ATX PSU.

The RaspberryPi requires to enable UART at startup, by setting enable_uart=1 in config.txt.

Mathieu ABATI (mathieu-abati.com) & Patrick ABATI (sitelec.org)

Sheet: /
File: ATXModule.kicad_sch

Title: RaspberryPi ATX PSU control module

Size: A4	Date: 2025-11-06	**Rev: 1.1**
KiCad E.D.A. 9.0.4		Id: 1/1