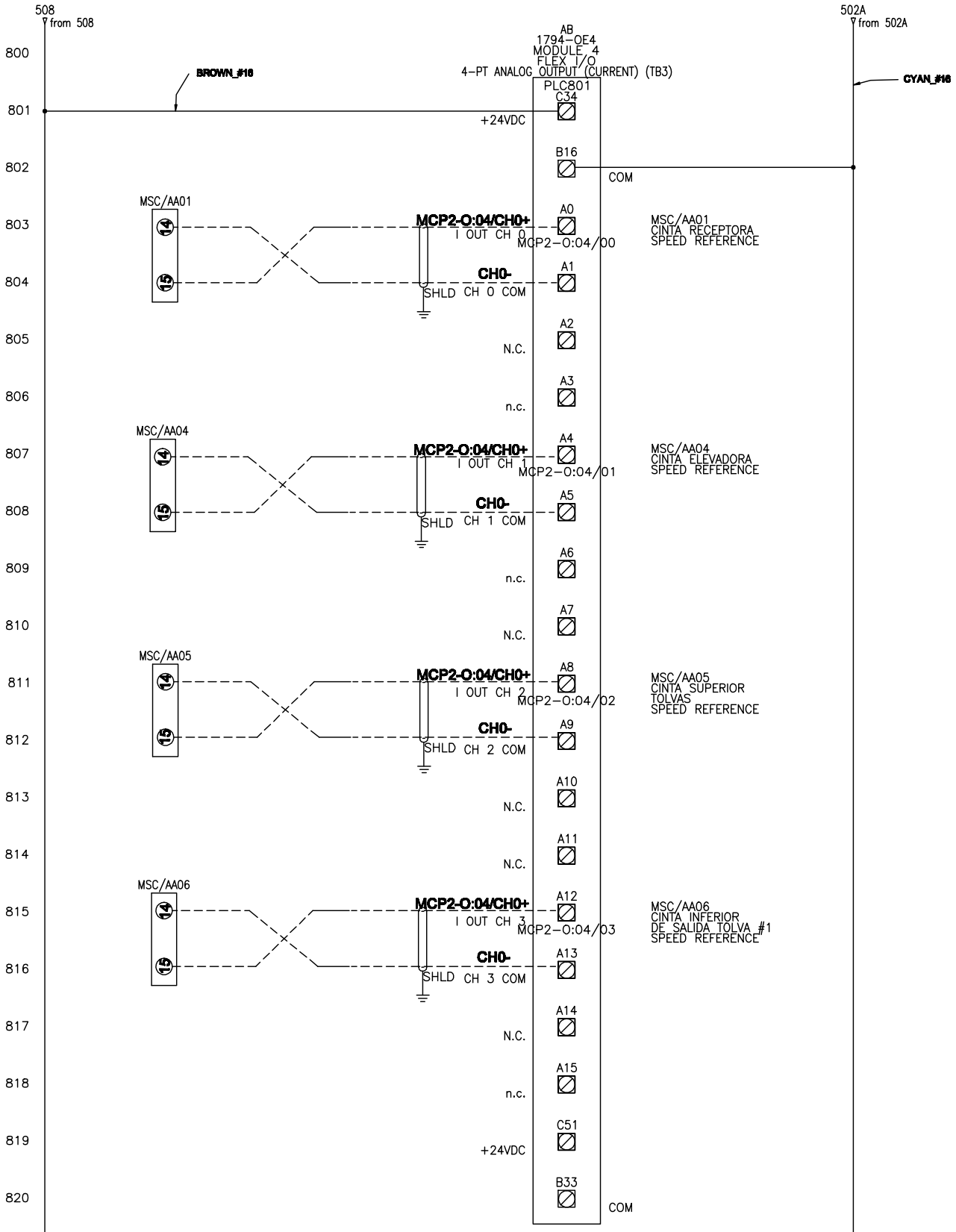

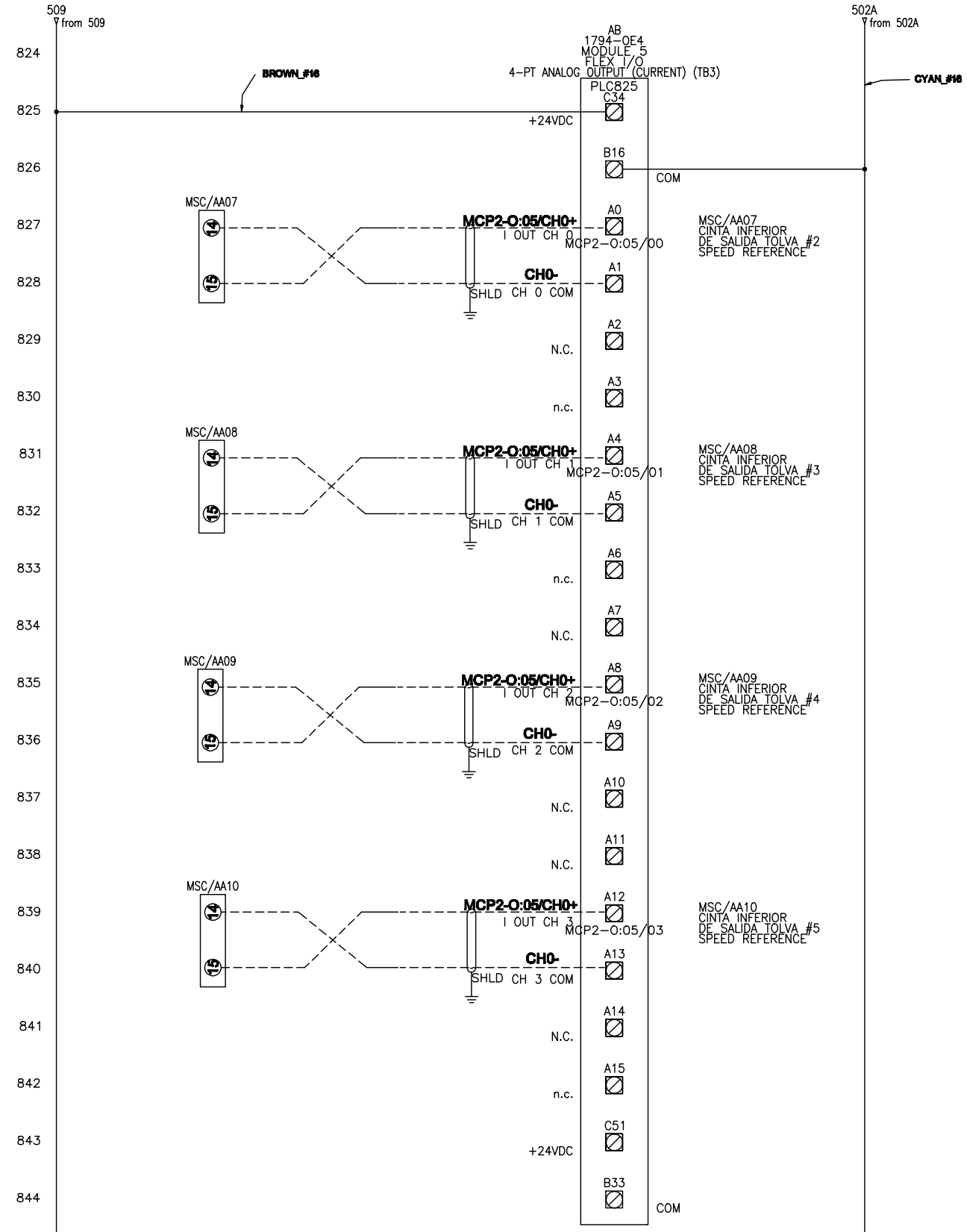

ADAPTIVE RESOURCES SM

NO.	DATE	REVISION	BY
6	12/21/09	CAMBIOS EN ARRANQUE	CR
5	10/20/09	CAMBIOS EN PEPSICO	CR
4	09/21/09	PARA CONSTRUCCION	CR
3	08/24/09	PARA CONSTRUCCION	CR

DWG TITLE

PEPSICO
DE ARGENTINA S.R.L.
PC-32
POTATO UNLOADING

ENGINEER *Sergio Reyes*	CHECKED BY *Eliseo Rdz*
JOB NO R150052	DRAWN BY *Charlie Rdz*
SCALE 1:1	DATE 08/27/2009

DWG NO *MCP2-8*

SHEET NO *8 OF 15*

CAD DWG FILE C:\DOCUMENTS AND SETTINGS\AR\MY DOCUMENTS\ACADE 2009\AEDATA\PROJ\ECUADOR PC-14\ECUADOR PC-14.DWG