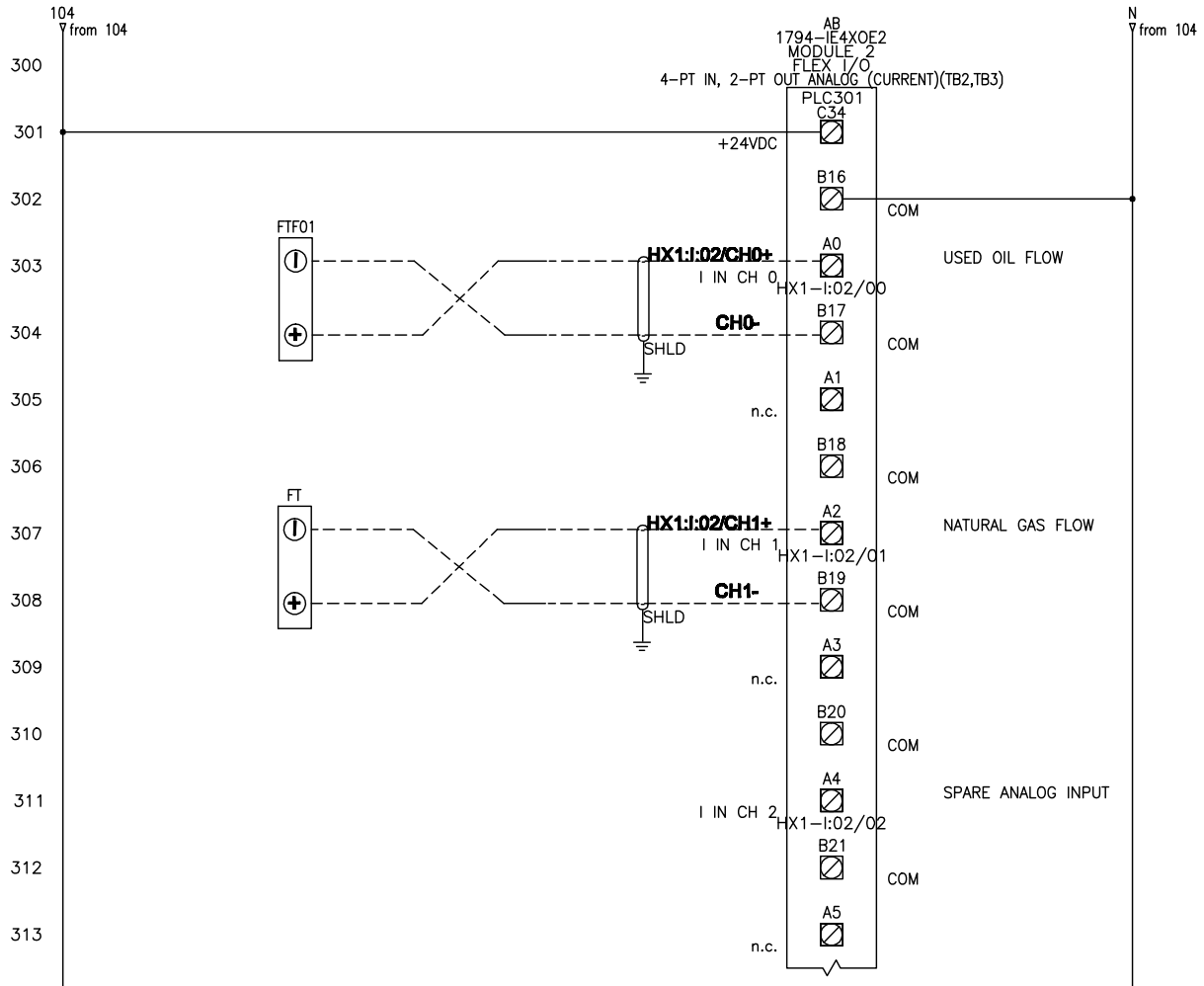

TYPICAL LOOP POWER CONNECTION

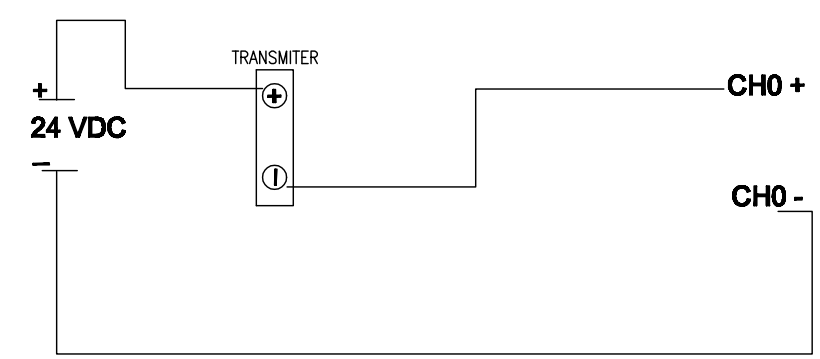

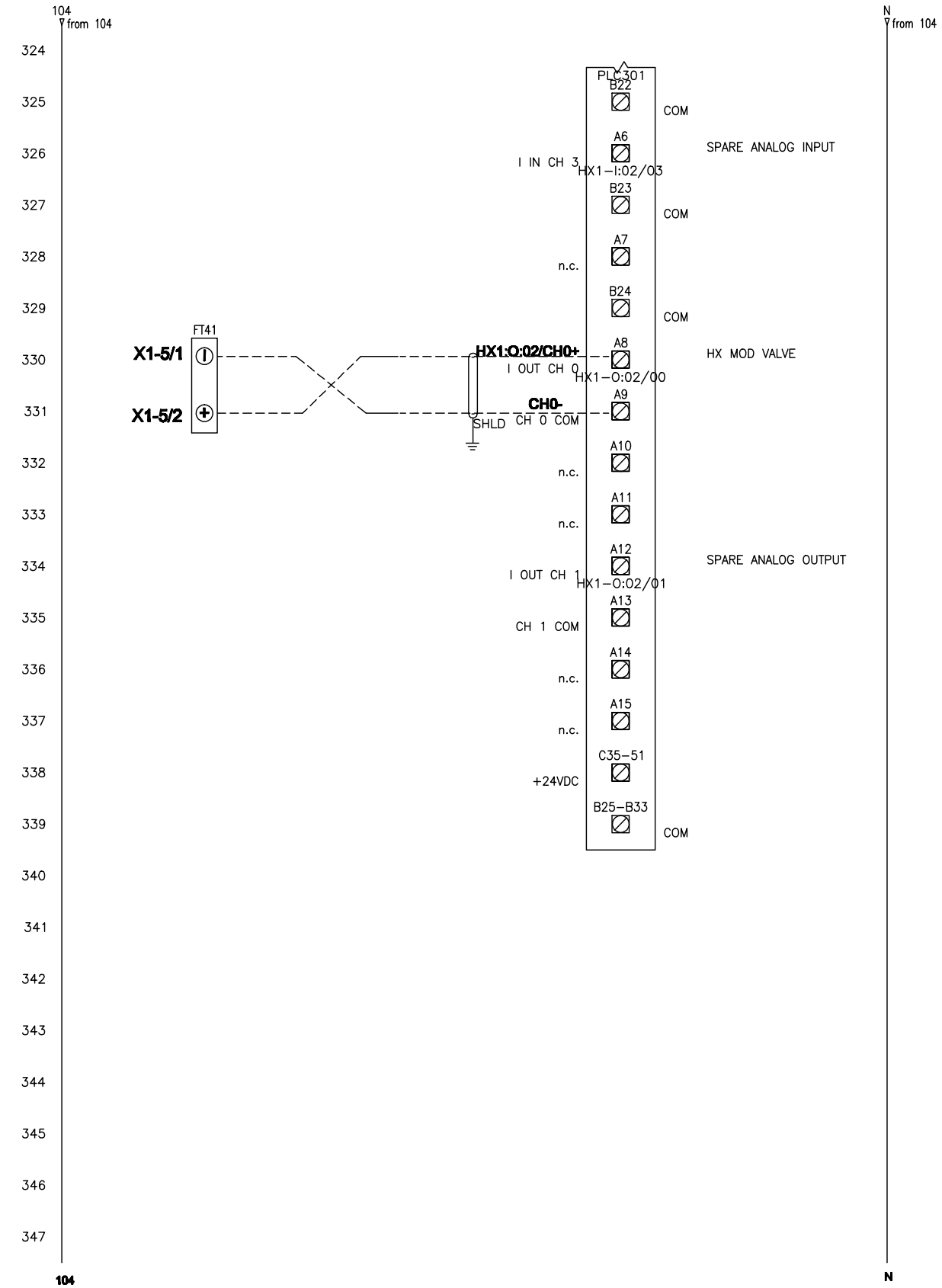

ADAPTIVE RESOURCES℠

NO.	DATE	REVISION	BY
6	12/21/09	CAMBIOS EN ARRANQUE	CR
5	10/30/09	CAMBIOS EN PEPSICO	CR
4	08/21/09	PARA CONSTRUCCION	CR
3	06/24/09	PARA CONSTRUCCION	CR

DWG TITLE

PEPSICO
DE ARGENTINA S.R.L.
PC-32

ENGINEER *Sergio Reyes*	CHECKED BY *Eliseo Rdz*
JOB NO R150052	DRAWN BY *Charlie Rdz*
SCALE 1:1	DATE 02/14/2009

DWG NO

FLEX I/O HX-3B

SHEET NO

3 OF 7

CAD DWG FILE C:\DOCUMENTS AND SETTINGS\ARVMY DOCUMENTS\ACADE 2009\AEDATA\PROJ\ECUADOR PC-14\ECUADOR PC-14.DWG