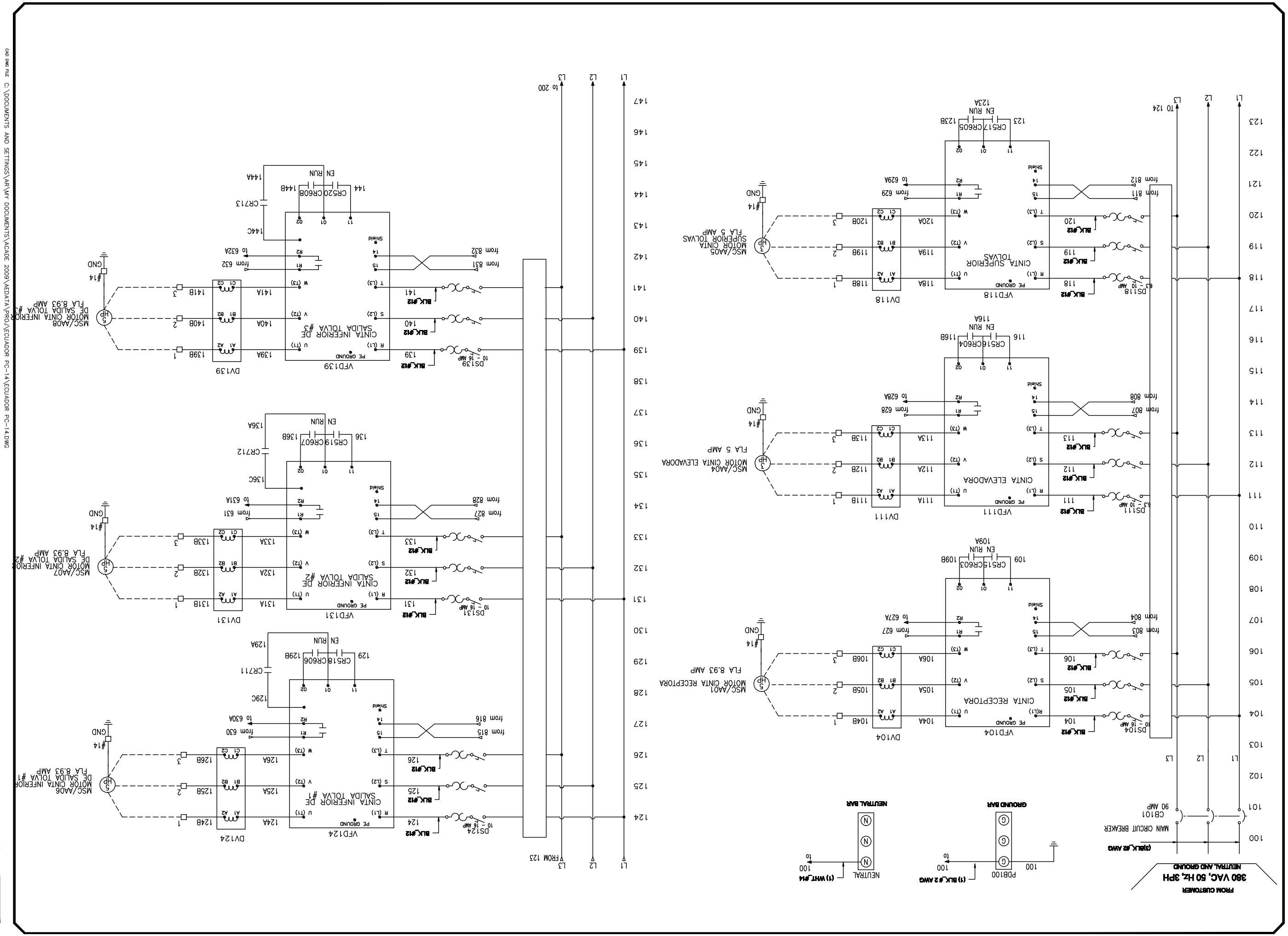


PEPSICO
DE ARGENTINA S.R.L.
PC-32
POTATO UNLOADING

| ENGINEER | CHECKED BY |
|---|---|
| Sergio Reyes | Eliseo Ruiz |

| JOB NO | DRAWN BY |
|---|---|
| R150052 | Charlie Ruiz |

| SCALE | DATE |
|---|---|
| 1:1 | 08/27/2009 |

DWG NO: MCP2-1

SHEET NO: 1 OF 15

| NO. | DATE | REVISION | BY |
|---|---|---|---|
| 8 | 12/2/09 | CAMBIOS EN ARMADO | CR |
| 5 | 10/30/09 | CAMBIOS EN ARMADO | CR |
| 4 | 08/21/09 | PARA CONSTRUCCION | CR |
| 3 | 08/24/09 | PARA CONSTRUCCION | CR |

DWG TITLE

CAD DWG FILE: C:\DOCUMENTS AND SETTINGS\AR\MY DOCUMENTS\ACADE 2009\AEDATA\PROJ\ECUADOR PC-14\ECUADOR PC-14.DWG

ADAPTIVE RESOURCES SM