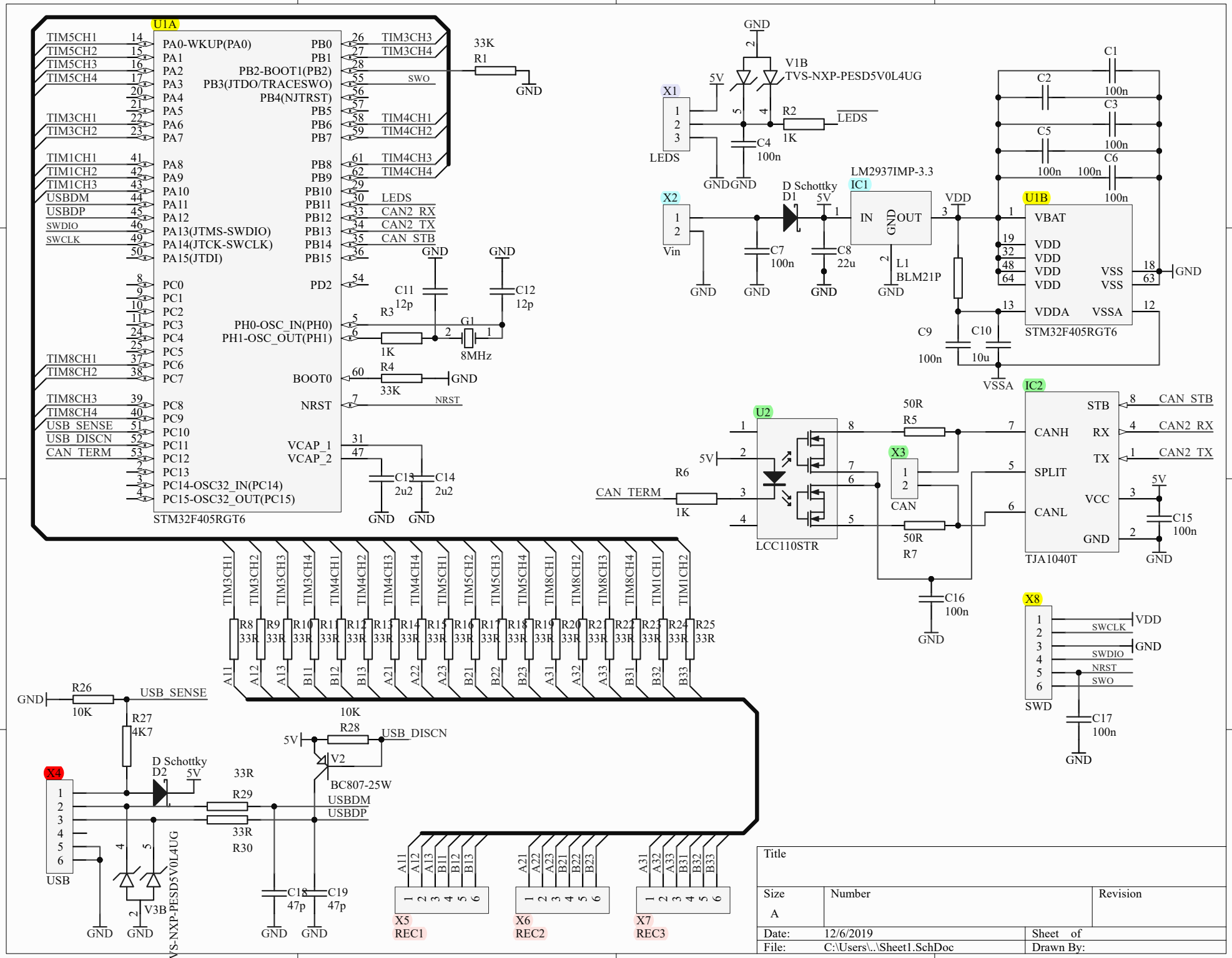
U1A
STM32F405RGT6
PA0-WKUP(PA0)
PA1
PA2
PA3
PA4
PA5
PA6
PA7
PA8
PA9
PA10
PA11
PA12
PA13(JTMS-SWDIO)
PA14(JTCK-SWCLK)
PA15(JTDI)
PC0
PC1
PC2
PC3
PC4
PC5
PC6
PC7
PC8
PC9
PC10
PC11
PC12
PC13
PC14-OSC32_IN(PC14)
PC15-OSC32_OUT(PC15)
PB0
PB1
PB2-BOOT1(PB2)
PB3(JTDO/TRACESWO)
PB4(NJTRST)
PB5
PB6
PB7
PB8
PB9
PB10
PB11
PB12
PB13
PB14
PB15
PD2
PH0-OSC_IN(PH0)
PH1-OSC_OUT(PH1)
BOOT0
NRST
VCAP_1
VCAP_2
TIM5CH1
TIM5CH2
TIM5CH3
TIM5CH4
TIM3CH1
TIM3CH2
TIM1CH1
TIM1CH2
TIM1CH3
USBDM
USBDP
SWDIO
SWCLK
TIM8CH1
TIM8CH2
TIM8CH3
TIM8CH4
USB_SENSE
USB_DISCN
CAN_TERM
TIM3CH3
TIM3CH4
SWO
TIM4CH1
TIM4CH2
TIM4CH3
TIM4CH4
LEDS
CAN2_RX
CAN2_TX
CAN_STB
R1
33K
GND
C11
12p
C12
12p
R3
1K
G1
8MHz
R4
33K
NRST
C13
2u2
C14
2u2
X1
LEDS
V1B
TVS-NXP-PESD5V0L4UG
5V
R2
1K
C4
100n
X2
Vin
D Schottky
D1
C7
100n
C8
22u
IC1
LM2937IMP-3.3
IN
OUT
L1
BLM21P
VDD
C1
C2
C3
C5
C6
100n
U1B
STM32F405RGT6
VBAT
VDD
VSS
VDDA
VSSA
C9
100n
C10
10u
VSSA
U2
LCC110STR
R5
50R
R6
1K
CAN_TERM
X3
CAN
R7
50R
IC2
TJA1040T
STB
CANH
RX
TX
SPLIT
VCC
CANL
GND
CAN_STB
CAN2_RX
CAN2_TX
C15
100n
C16
100n
X8
SWD
SWCLK
SWDIO
NRST
SWO
C17
100n
TIM3CH1
TIM3CH2
TIM3CH3
TIM3CH4
TIM4CH1
TIM4CH2
TIM4CH3
TIM4CH4
TIM5CH1
TIM5CH2
TIM5CH3
TIM5CH4
TIM8CH1
TIM8CH2
TIM8CH3
TIM8CH4
TIM1CH1
TIM1CH2
R8 33R
R9 33R
R10 33R
R11 33R
R12 33R
R13 33R
R14 33R
R15 33R
R16 33R
R17 33R
R18 33R
R19 33R
R20 33R
R21 33R
R22 33R
R23 33R
R24 33R
R25 33R
A11 A12 A13 B11 B12 B13 A21 A22 A23 B21 B22 B23 A31 A32 A33 B31 B32 B33
R26
10K
USB_SENSE
R27
4K7
R28
10K
USB_DISCN
V2
BC807-25W
X4
USB
D Schottky
D2
R29
33R
R30
33R
USBDM
USBDP
V3B
TVS-NXP-PESD5V0L4UG
C18
47p
C19
47p
X5
REC1
X6
REC2
X7
REC3
Title
Size
A
Number
Revision
Date: 12/6/2019
Sheet of
File: C:\Users\..\Sheet1.SchDoc
Drawn By: