Virtual LANs (VLANs)

Redes de Comunicações II

Licenciatura em Engenharia de Computadores e Informática

Prof. Amaro de Sousa (asou@ua.pt)

DETI-UA, 2025/2026

Local Area Network (LAN)

- A LAN is a computer network within a small geographical area.
  - Home, school, room, office building or group of buildings.
- It enable attached hosts to communicate directly between them (through Layer 2 switching).
  - Host refers generically to a PC, server, or any other terminal.
- Hosts in different LANs communicate through routers (Layer 3 routing)
- Technologies
  - Current: Ethernet, 802.11 (Wi-Fi)
  - Legacy: Token Ring, FDDI, …

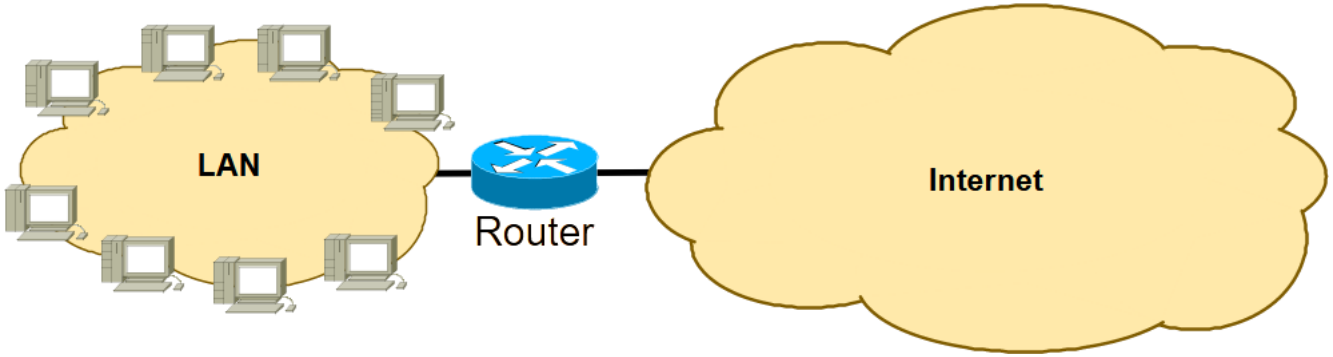

Layer 2 Switching versus Layer 3 Routing

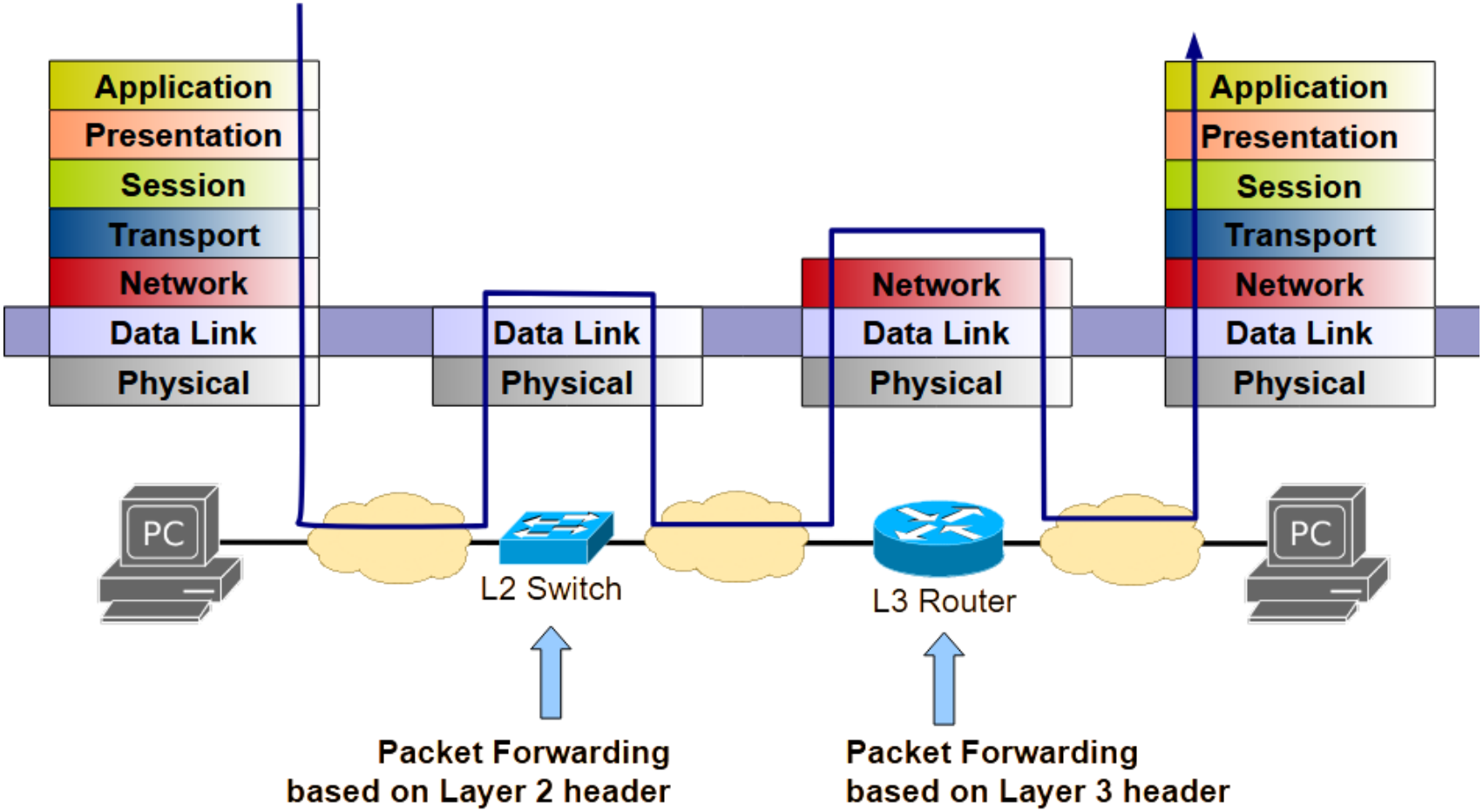

Virtual LAN (VLAN)

- A VLAN is a group of hosts with a common set of requirements or characteristics in the same broadcast domain.
  - Independent of their physical location.
- VLANs solve the scalability problems of large LANs
  - by breaking a single broadcast domain into different smaller broadcast domains,
  - and allowing better network administration and security deployment.
- Hosts in different VLANs do not communicate via Layer 2 switching.
  - Their communications are done at Layer 3 (with IP routing).

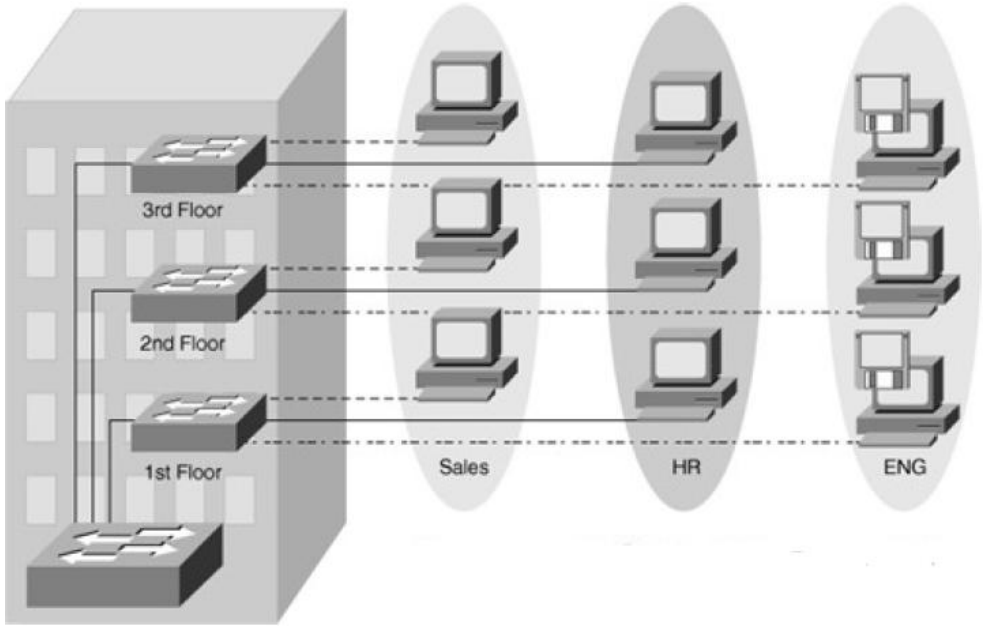

VLANs configured on a Switch

- The VLAN of a host is configured in the port of the switch the host is connected to (the host is unaware of the VLAN it belongs to).
  - Example below: ports 1-5 are configured as access ports in VLAN 10 and ports 15-24 are configured as access ports in VLAN 5
    - a host connected to port 2 is on VLAN 10,
    - a host connected to port 20 is on VLAN 5.

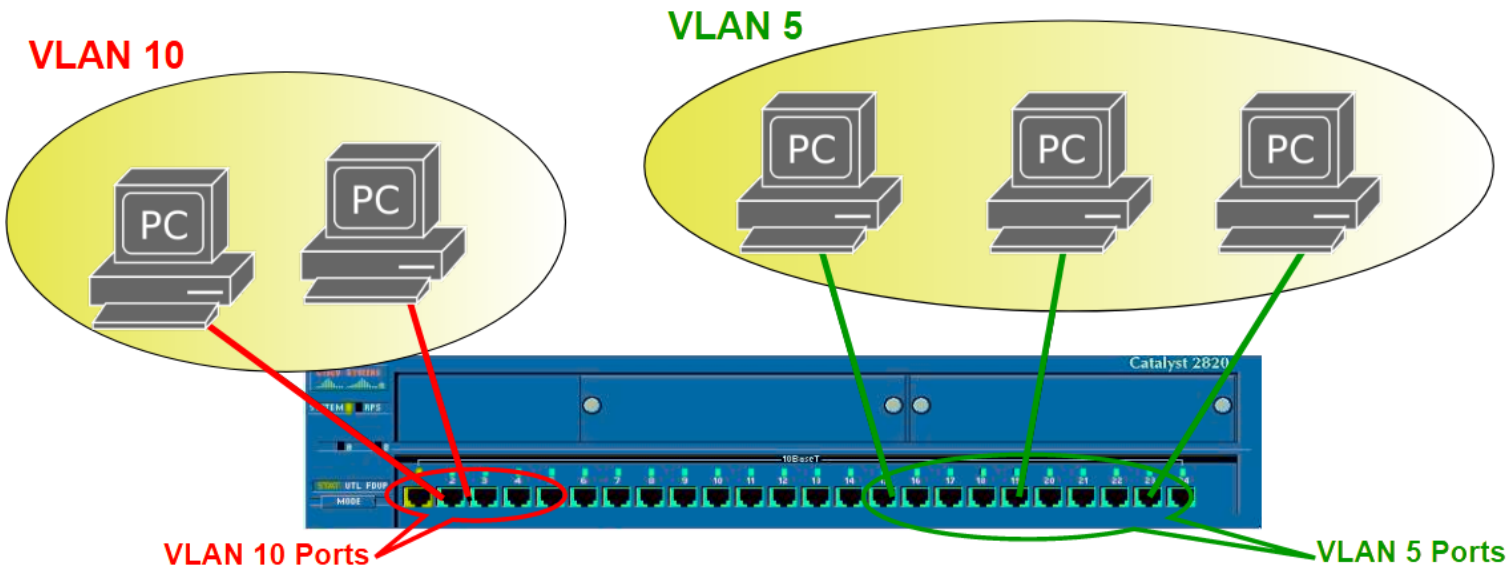

- VLAN 1 is usually reserved for network administration.

Example - VLAN

Pings sent by 10.0.0.1

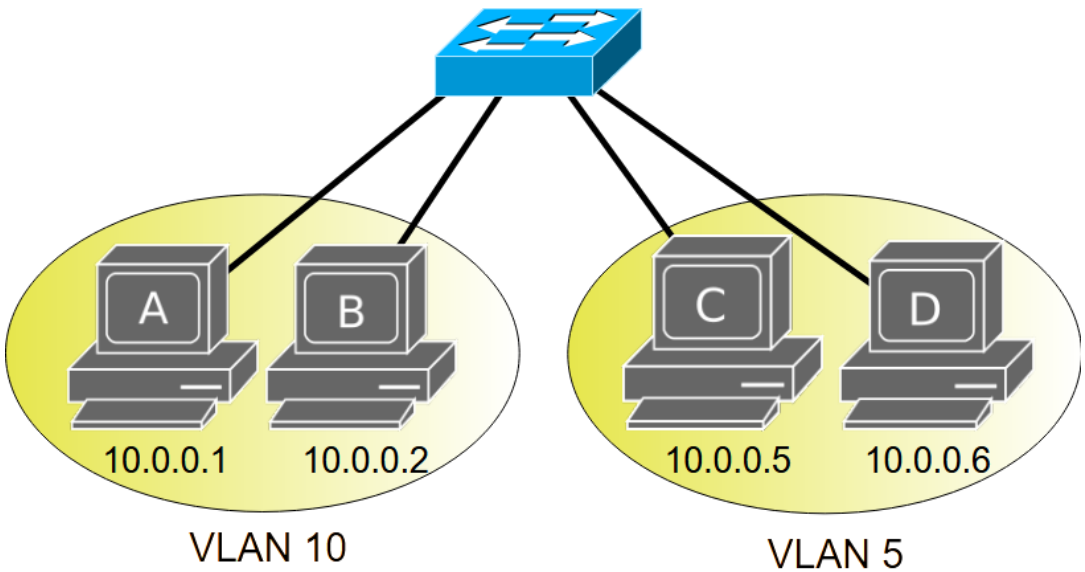


```
# ping 10.0.0.2

Pinging 10.0.0.2 with 32 bytes of data:

Reply from 10.0.0.2: bytes=32 time<10ms TTL=128
Reply from 10.0.0.2: bytes=32 time<10ms TTL=128
Reply from 10.0.0.2: bytes=32 time<10ms TTL=128
Reply from 10.0.0.2: bytes=32 time<10ms TTL=128

Ping statistics for 10.0.0.2:
    Packets: Sent = 4, Received = 4, Lost = 0 (0% loss),
Approximate round trip times in milli-seconds:
    Minimum = 0ms, Maximum =  0ms, Average =  0ms
```

```
# ping 10.0.0.5

Pinging 10.0.0.5 with 32 bytes of data:

Request timed out.
Request timed out.
Request timed out.
Request timed out.

Ping statistics for 10.0.0.5:
    Packets: Sent = 4, Received = 0, Lost = 4 (100% loss),
Approximate round trip times in milli-seconds:
    Minimum = 0ms, Maximum =  0ms, Average =  0ms
```

IMPORTANT NOTE:

- The example considers both VLANs with the same IP network address to highlight that the physical switch behaves as two separate switches
- In practice, different VLANs must be assigned with different IP network addresses.

VLANs extended to Multiple Switches

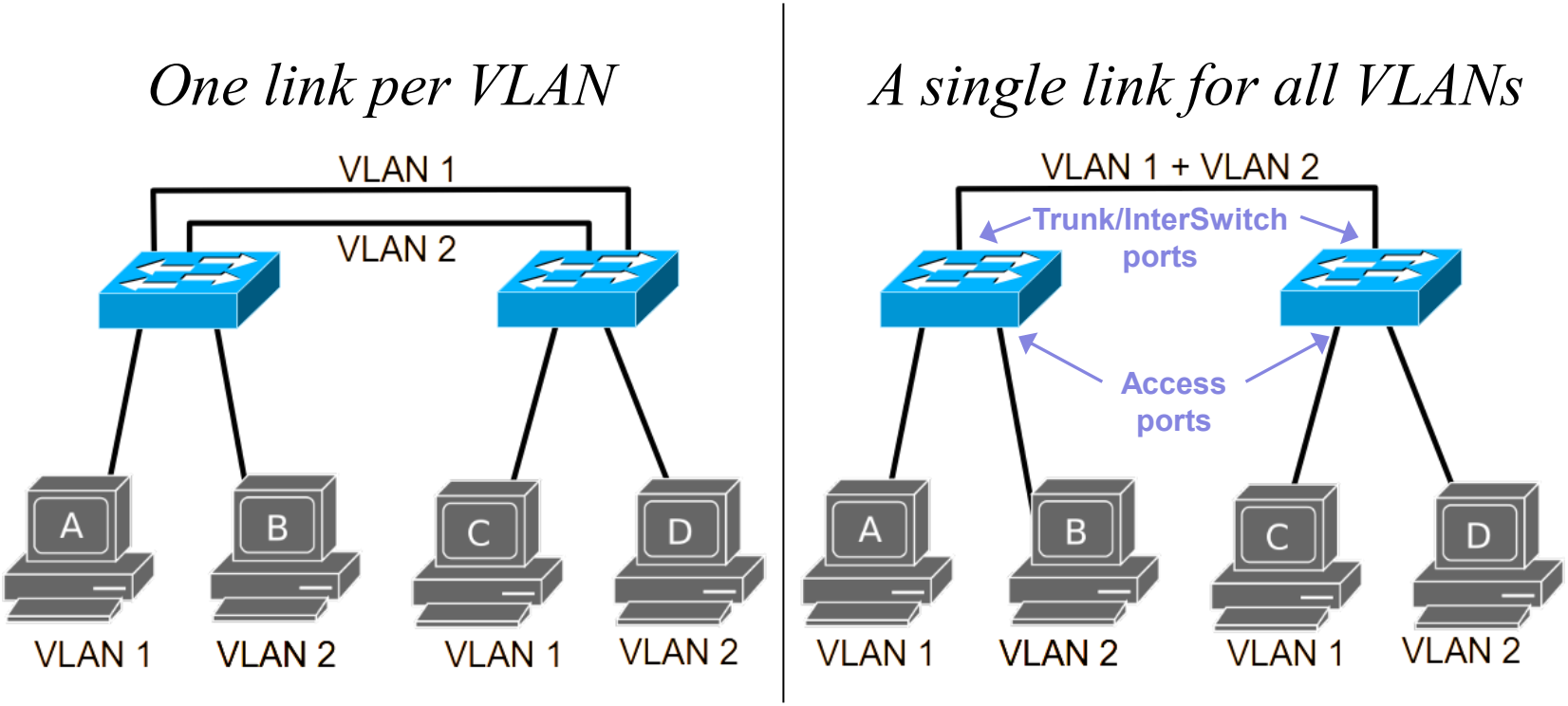

- A single link requires a mechanism to differentiate frames from different VLANs.
- Each frame must have a tag to identify its VLAN:
  - added when received from an Access port and forwarded to a Trunk port
  - removed when received from a Trunk port and forwarded to an Access port

IEEE 802.1Q Standard

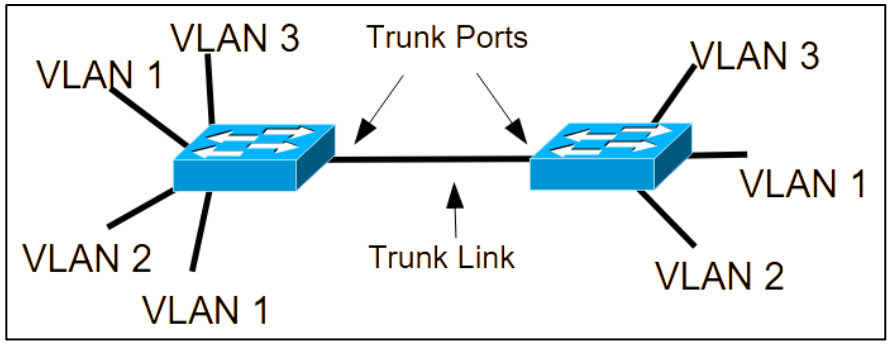

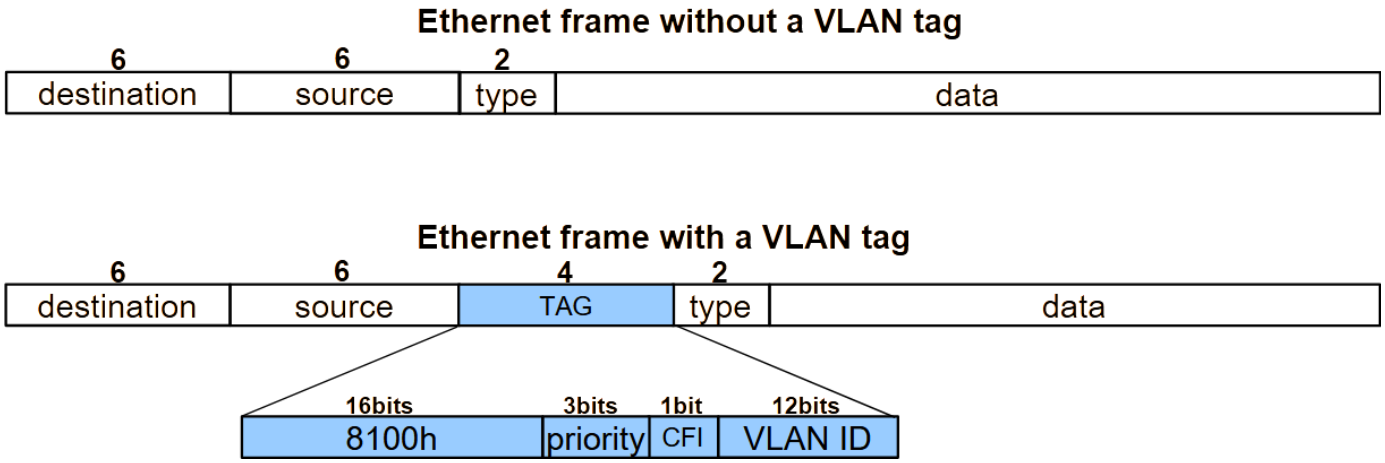

- Priority (3 bits): frame priority (from 0 to 7)
  - a larger value indicates a higher priority (if congestion occurs, the switch sends first packets with higher priorities)
- CFI (1 bit): used to guarantee compatibility with older technologies
  - always 0 in Ethernet
- VLAN ID (12 bits): VLAN identifier (from 0 to 4095)
  - valid VLAN IDs range from 1 to 4094 (the values 0 and 4095 are reserved)

Trunk links

- The physical link between two Trunk ports is called a Trunk link (or simply a trunk).
- A trunk carries traffic of multiple VLANs using IEEE 802.1Q.
  - ISL (Inter-Switch Link) encapsulation is an alternative to support multiple VLANs in a trunk, but it is getting obsolete.
- By configuration, trunks may support all VLANs or only some!

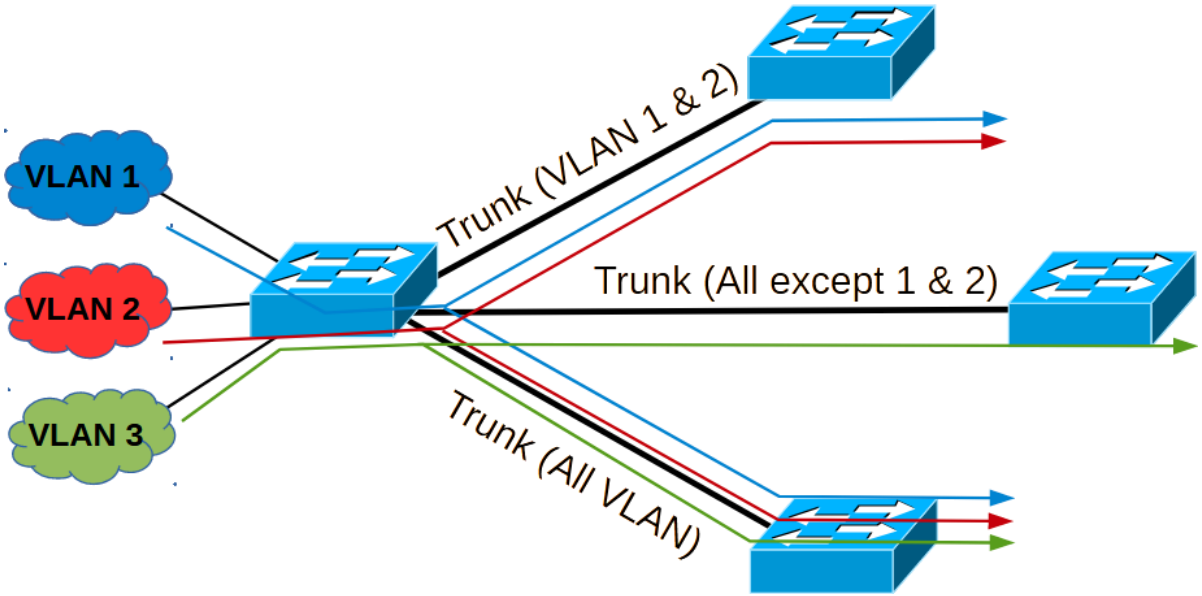

Example of a capture in a Trunk link

Capture of a ping from 10.0.0.2 to 10.0.0.1

Filter: icmp | Expression... | Clear | Apply

No.	Time	Source	Destination	Protocol	Info
23	11.535990	10.0.0.2	10.0.0.1	ICMP	Echo (ping) request
24	11.536995	10.0.0.1	10.0.0.2	ICMP	Echo (ping) reply
27	12.538443	10.0.0.2	10.0.0.1	ICMP	Echo (ping) request
28	12.539186	10.0.0.1	10.0.0.2	ICMP	Echo (ping) reply

```
▷ Frame 23 (102 bytes on wire, 102 bytes captured)
▷ Ethernet II, Src: 00:aa:00:53:7c:00 (00:aa:00:53:7c:00), Dst: 00:aa:00:fa:67:00 (00:aa:00:fa:67:00)
▽ 802.1Q Virtual LAN, PRI: 0, CFI: 0, ID: 2
    000. .... .... .... = Priority: 0
    ...0 .... .... .... = CFI: 0
    .... 0000 0000 0010 = ID: 2
    Type: IP (0x0800)
▷ Internet Protocol, Src: 10.0.0.2 (10.0.0.2), Dst: 10.0.0.1 (10.0.0.1)
▷ Internet Control Message Protocol
```

VLAN ID = 2

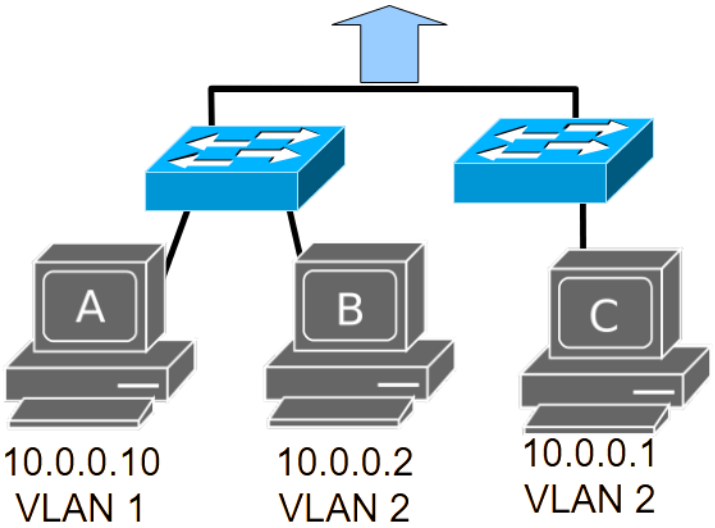

Layer 3 Switch (L3 Switch)

- A Layer 3 Switch (L3 Switch) is an equipment that combines the routing capabilities of a Router and the switching capabilities of a Switch.

L3 Switch Router + Switch

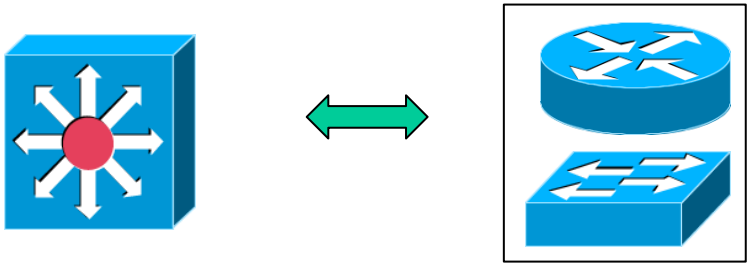

- In general, a L3 Switch has:
  - Switching ports: conceptually connected to the switch
  - Routing ports: conceptually connected to the router
- There are L3 Switch models that allow the physical interfaces to be configured as switching ports or routing ports
- A L3 Switch allows IP routing between VLANs

IP Connectivity between VLANs <u>with Routers</u>

- Communication between VLANs requires Layer 3 Routing
  - Each VLAN is assigned an IP network address
- Solution with a <u>Router (supporting IEEE 802.1Q)</u>:
  - Configuring the physical router interface as a Trunk port.
  - Configuring this interface with one sub-interface for each VLAN (and an IP address of the IP network assigned to the VLAN).
  - Setting the IP Default Gateway of each VLAN host with the IP address of the corresponding sub-interface in the Router.

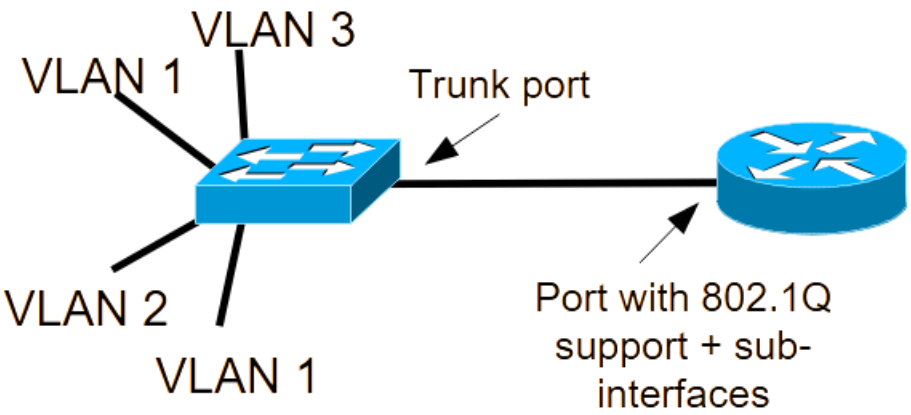

IP Connectivity between VLANs with L3 Switches

- Communication between VLANs requires Layer 3 Routing
  - Each VLAN is assigned an IP network address
- Solution with a L3 Switch:
  - Connecting both switches (L2 and L3) using Trunk ports.
  - Configuring each virtual interface of the L3 Switch with an IP address of the IP network assigned to the VLAN.
    - In L3 Switches, each VLAN is automatically mapped to a virtual interface.
  - Activating the IP routing process in the L3 Switch (if necessary).
  - Setting the IP Default Gateway of each VLAN host with the IP address of the corresponding virtual interface in the L3 Switch.

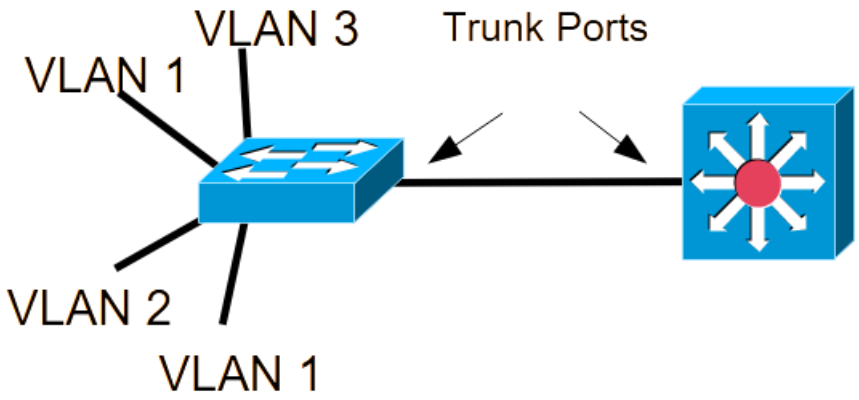

VLAN Segmentation Models

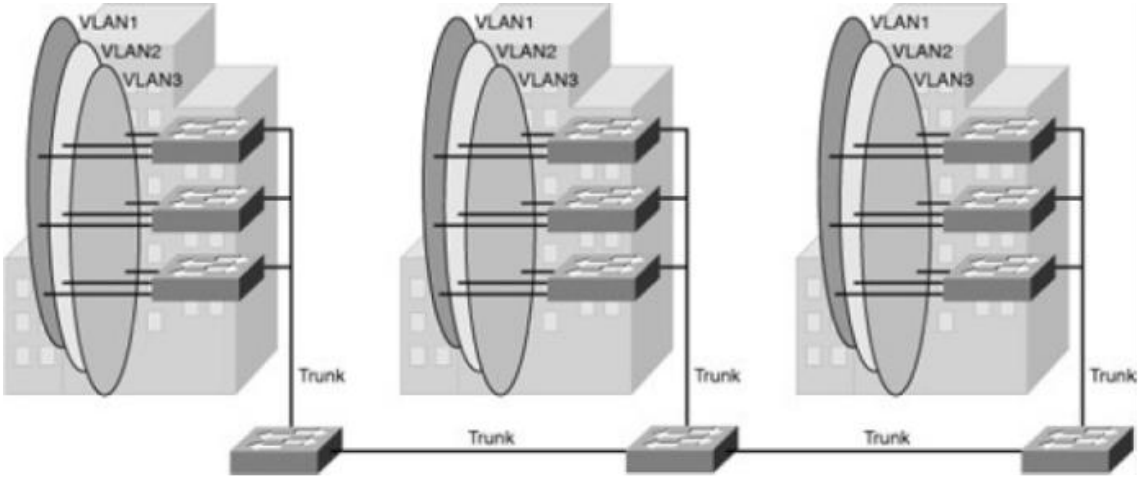

- End-to-End VLAN
  - VLAN are associated with switch access ports widely dispersed over the network

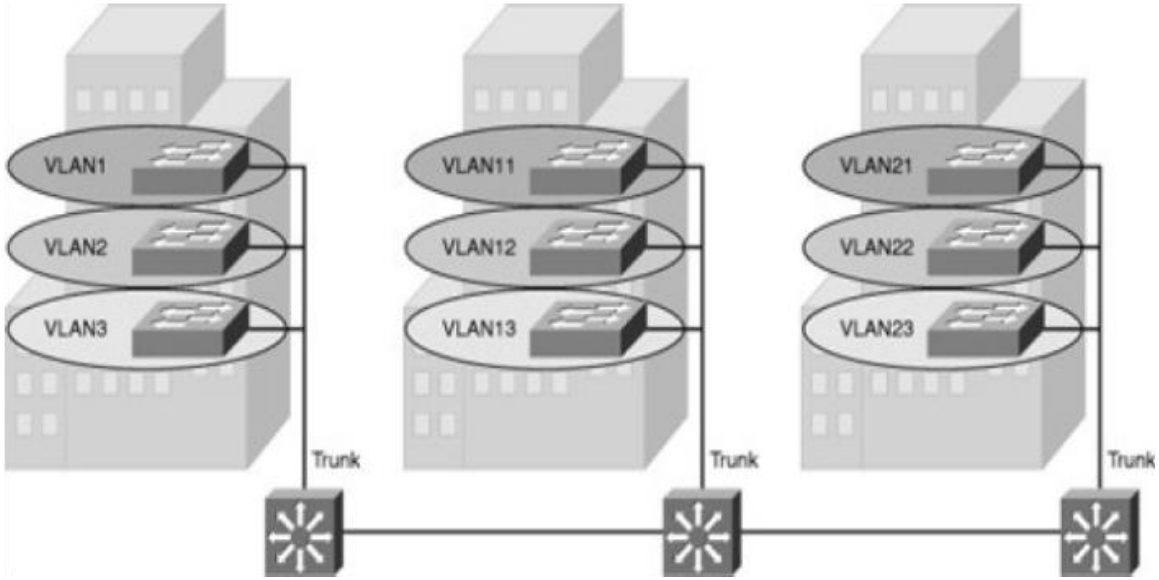

- Local VLAN
  - Local VLANs are generally confined to a wiring closet.

Routing between VLANs

Where to configure the routing between the different existing VLANs? Two possible approaches:

- Centralized Routing Approach
- Distributed Routing Approach

Consider the follow example (used in the next slides) with one end-to-end VLAN (VLAN 1) and two local VLANs (21 and 31):

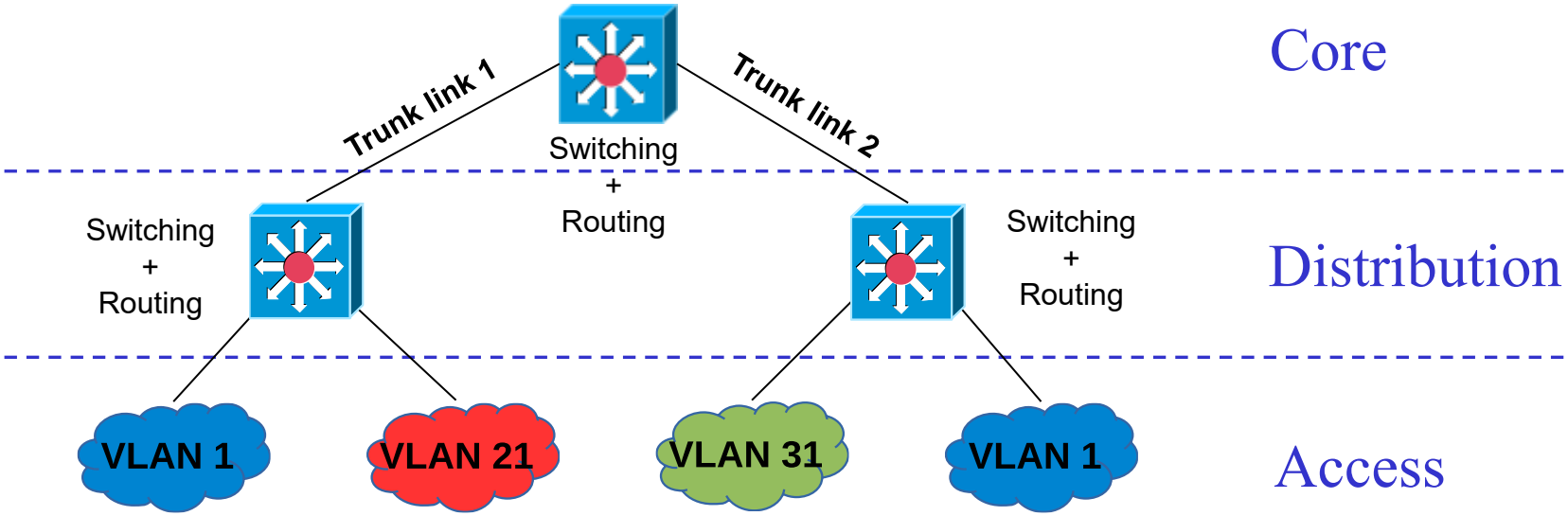

Centralized routing between VLANs

- Centralized routing (illustration in the next slide):
  1. All VLANs are routed in the most central Core L3 Switch, which is usually the one connecting the network to outside
  2. All trunks are configured to support all VLANs
- Advantages:
  - It requires only L2 Switches in the distribution layer (much less expensive than L3 Switches)
  - It allows any new host of any existing VLAN to be connected to any distribution switch with minimum configuration effort

Centralized routing in the example

- Network configuration:

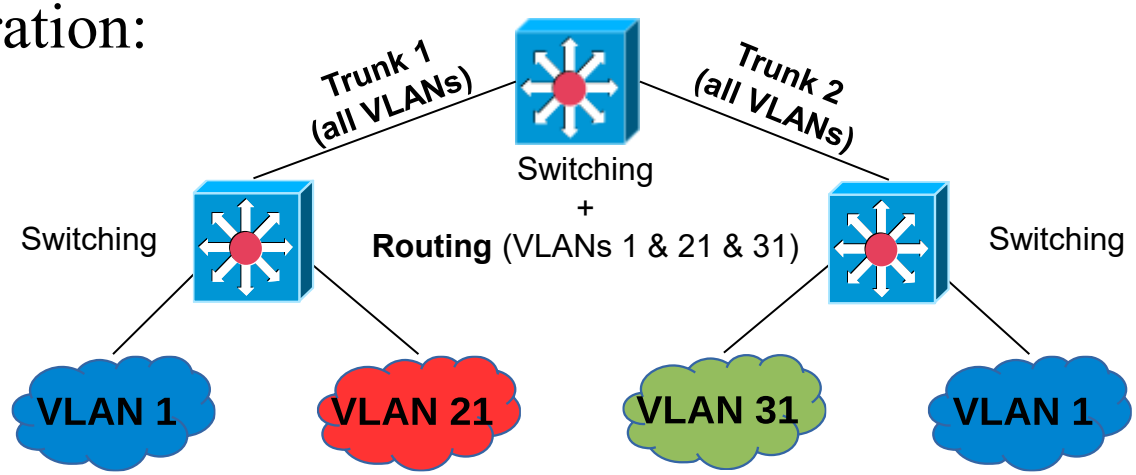

- Both trunk links are in the broadcast domain of all VLANs
- Routing layout of the network configuration:

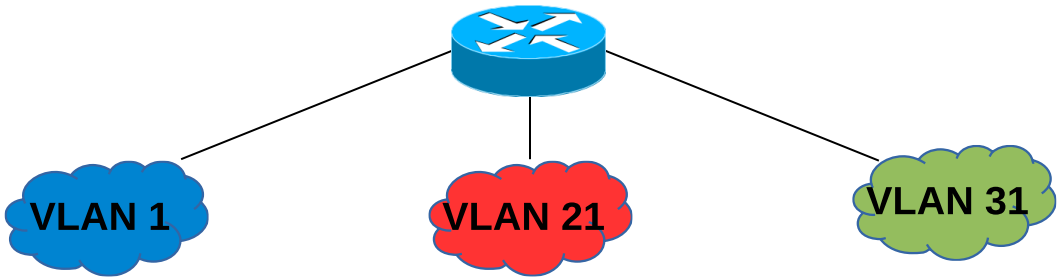

Distributed routing between VLANs

- Distributed routing (illustration in the next slide):
  1. The end-to-end VLANs are routed in the most central Core L3 Switch
  2. The local VLANs are routed in the Distribution L3 Switch where they are connected to
  3. A new VLAN (named interconnection VLAN) is created between all L3 Switches with routing (configured in 1 and 2)
  4. An IP routing protocol is created in all L3 Switches with routing (configured in 1 and 2) to enable global routing
  5. All trunk links are configured to support only the end-to-end VLANs and the interconnection VLAN
- Advantages: it is a more scalable solution as…
  - it reduces at minimum the broadcast domain of each VLAN
  - it distributes the routing among different switches

Distributed routing in the example

- Network configuration:

VLAN 50 selected to be the interconnection VLAN

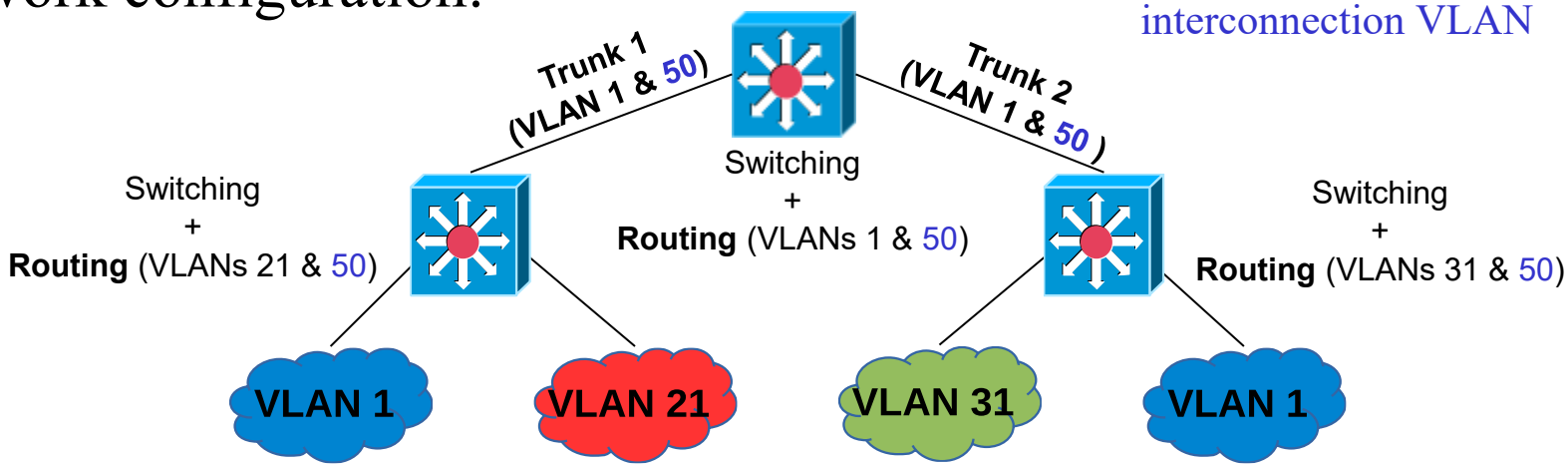

- Trunk links are only in the broadcast domain of VLANs 1 and 50
- Routing layout of the network configuration:

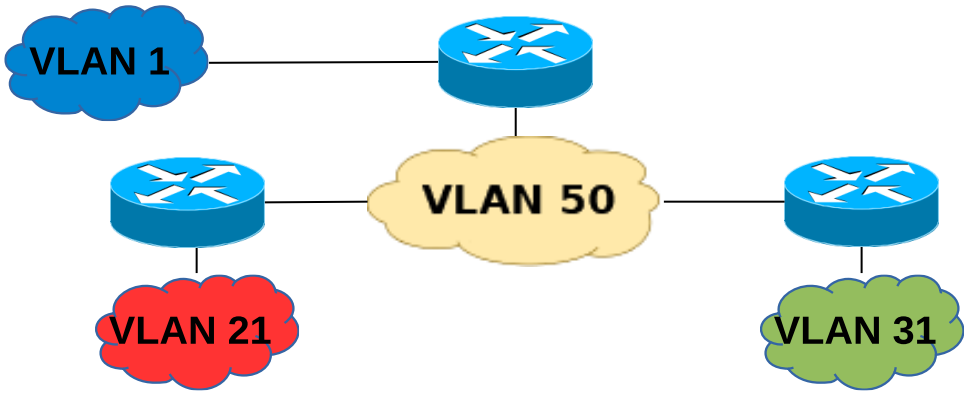

Ethernet Link Aggregation

- The capacity of one physical link may not be enough to support the throughput of all VLANs supported by it.
- *N* parallel links can be configured as an aggregated link to provide a logical single trunk with *N* times the capacity of each physical link.
  - Ethernet frames are "load-balanced" between all *N* physical links of the (logical) aggregated link.

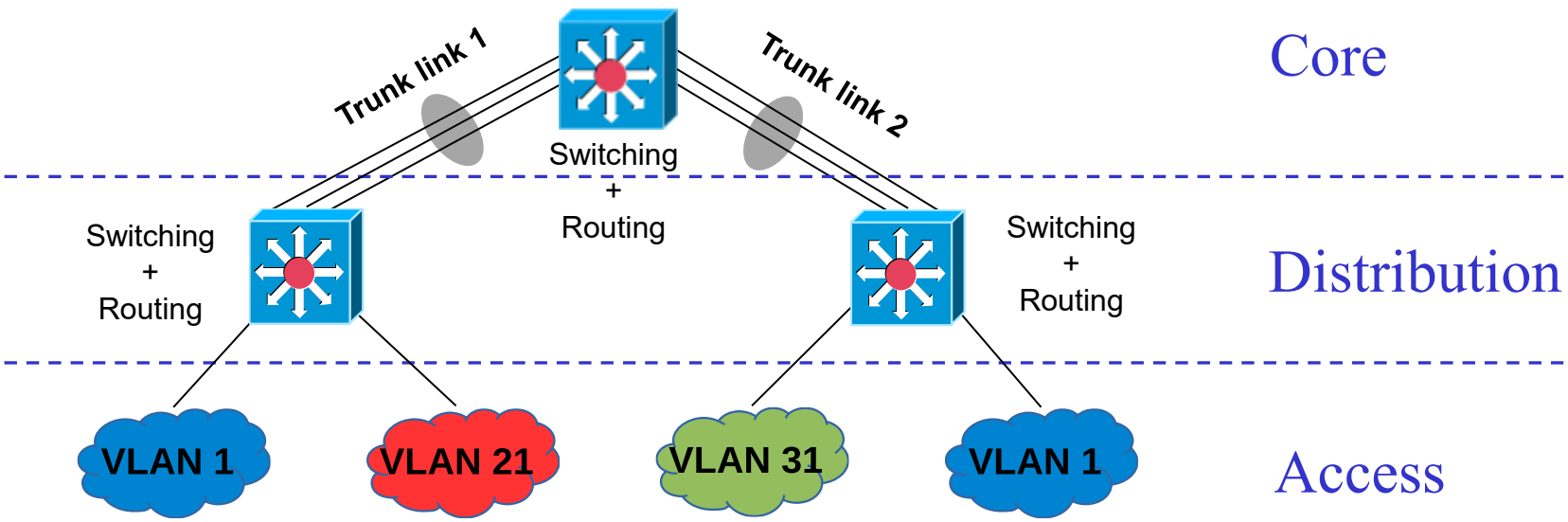

Example

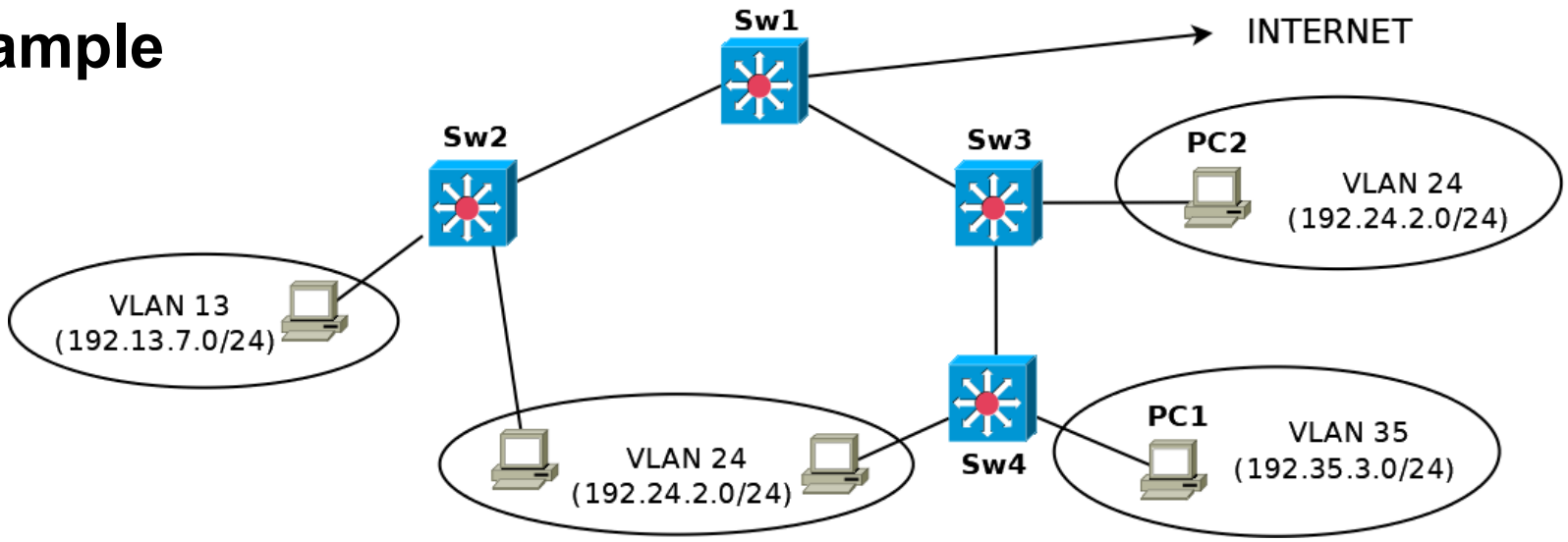

Consider the network of the figure with four L3 Switches and three VLANs (the figure indicates their assigned IP networks). The IP routing is assigned with a distributed approach and use VLAN 10 with the associated IP network 192.10.1.0/24 as its interconnecting VLAN. The host part of the IP addresses assigned to the switches is the number of the switches' names.

a) Indicate and justify the switch that routes the IP network assigned to each VLAN.

b) Are all switches required to be L3 Switches? Why?

c) If the routing between VLANs is through RIPv2 protocol, what is the IP routing table of Sw2?

d) Describe the path of the ICMP Echo Request messages in a ping from PC1 to PC2. Also, on each link of the path, indicate the VLAN number of the message.