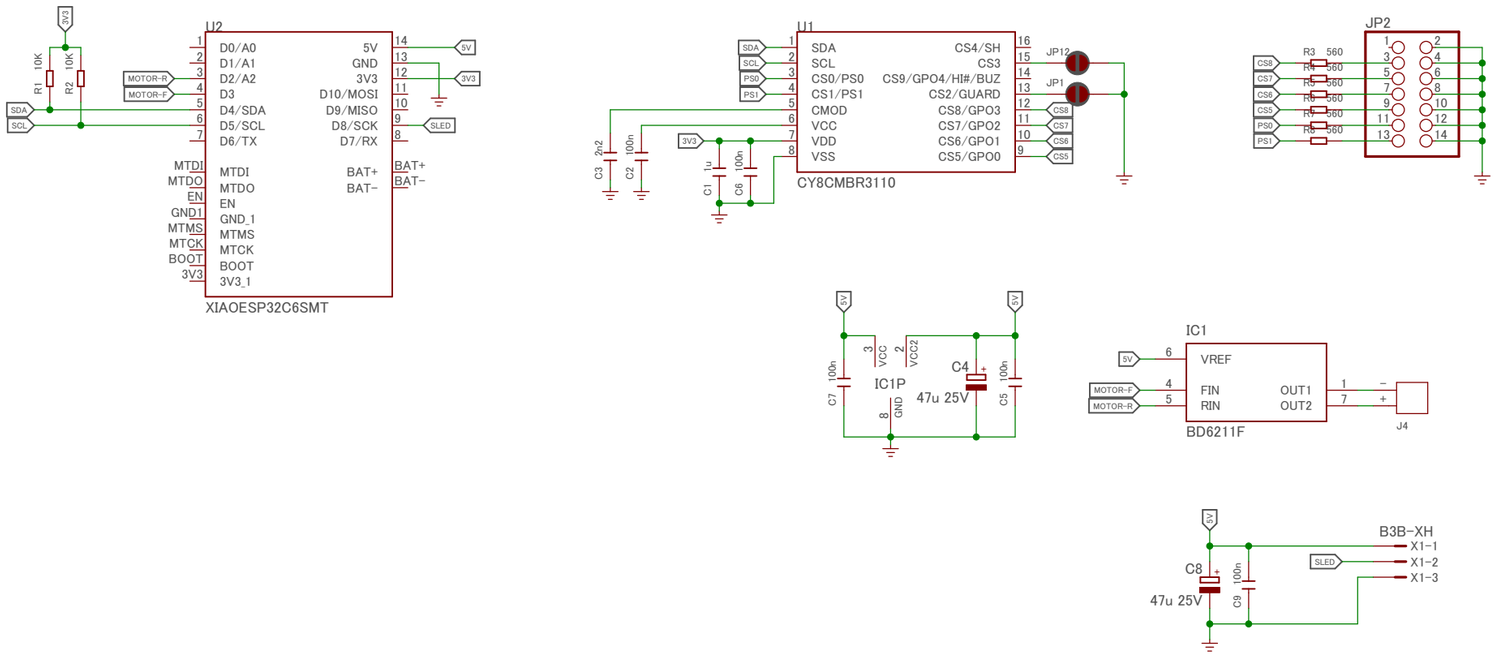

TITLE: miso-in-the-soup-xiao	
Document Number:	REV:
Date: 2024/10/08 12:06	Sheet: 1/1