Fault-Tolerant Attitude Control of Nanosatellites Using an Adaptive Sliding Mode Controller

Author: Matteo Venuti | 201735577 | Beng (Hons) Computer Science & Electronic Engineering | sgmvenut@liverpool.ac.uk
Supervisor: Dr Barry Smith
Assessor: Dr Simon Maher

UNIVERSITY OF LIVERPOOL

1. Introduction & Specifications:

Overview: Robust, compact modules are critical for expanding CubeSat mission capabilities.

Problem: Satellite sub-systems are **failure-prone**; non-redundant designs lead to total mission loss.

Objective: Develop a fault-tolerant Attitude Control System (ACS) for a **1U (10cm^3)** volume [3].

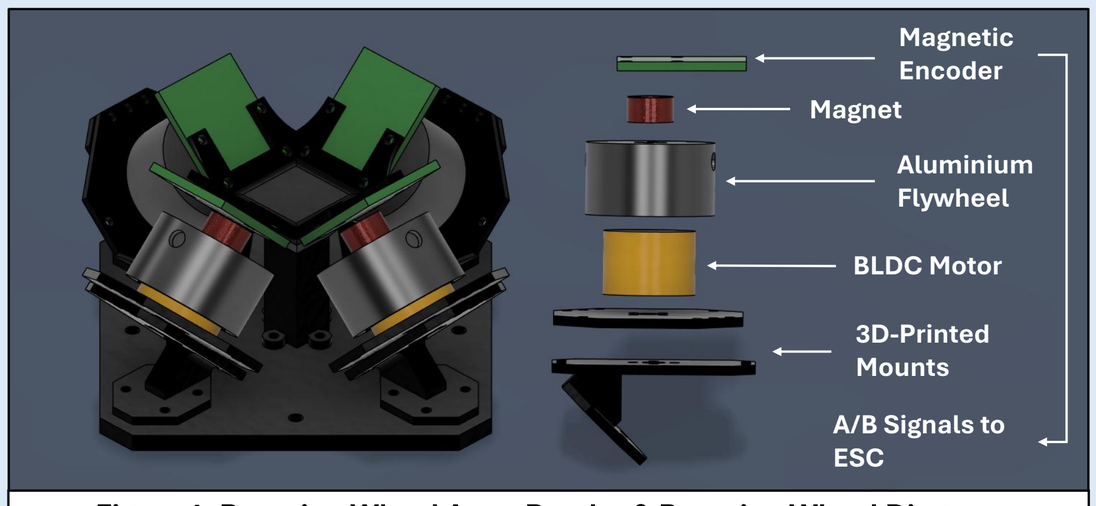

Figure 1: Reaction Wheel Array Render & Reaction Wheel Diagram

2. Theory & Background:

$$(1)\ J_s\dot{\omega} = -\omega * (J_s\omega + Ah_\omega) + T_c - T_w$$

$$(2)\ \dot{K}_{adaptive} = \Gamma\|s\| - \sigma(K_{max} - K_{min})$$

Satellite Configuration
Redundant Control: Attitude control is achieved using a **pyramid arrangement** of four reaction wheels (Fig. 1), ensuring full **control remains possible** even if a **single wheel fails**. Control torque is distributed using **Pseudo-inverse, 'A' (1)** for optimised **torque distribution** [4].

Control Logic: Adaptive Sliding Mode Control (ASMC)
System Robustness: A Sliding Mode Controller (SMC) is employed to drive the system state toward a stable sliding surface, **rejecting external disturbances** [2].
Operational Bounds: The adaptation law **(2)** ensures the **gain remains strictly bounded** between predefined minimum and maximum limits. It is used to tune controller gain dynamically.

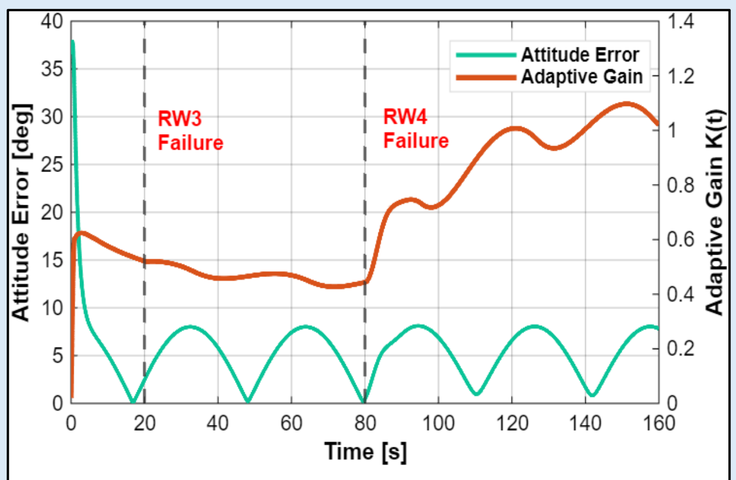

Figure 2A. Adaptive Gain Response

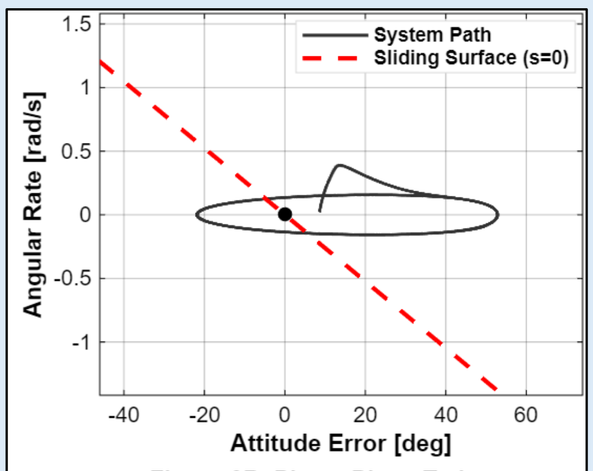

Figure 2B. Phase Plane Trajectory

3. Methodology:

Hardware Design & Fabrication
CAD Modeling: The assembly was designed in Fusion360 to **meet** the strict 1U (10cm)^3 **CubeSat volume constraints**.
Reproducibility: Accessibility is maximized by using **commercially available electronics** and 3D-printable structures to **facilitate easy design replication**.

System Integration
Inertia-Based Modeling: The controller utilizes an inertia-based model, which **simplifies the integration** of this module into various satellite designs.
Autonomous Resilience: The system is designed to provide control **without requiring motor feedback**, **reducing complexity** and potential points of failure.

Design Evaluation
Experimental Validation: Fault tolerance is verified by **injecting simulated wheel failures** (e.g., RW3, RW4) and monitoring the adaptive gain's ability to drive tracking errors to zero.

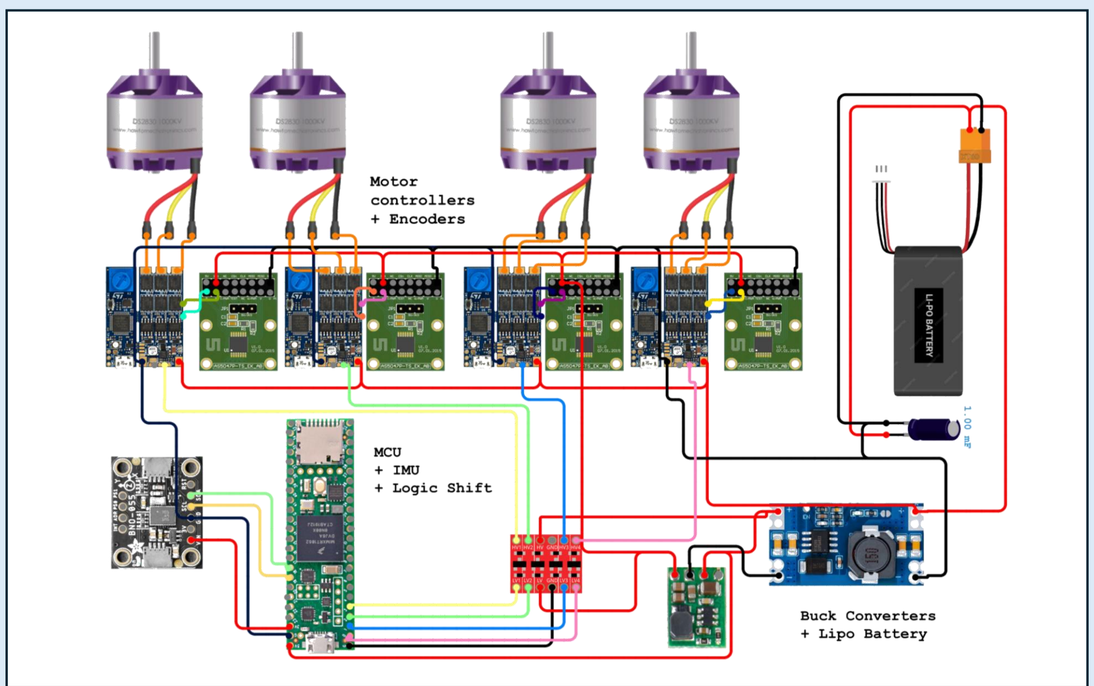

Figure 3: Circuit Diagram of Motors and Controller

4. Results:

Simulation
Fault Recovery: Figures 2A and 2C demonstrate the system's resilience actuator failure. The Adaptive Gain K(t) immediately scales to compensate for the loss of torque [1].
Convergence: Despite the failures, the attitude error is driven near zero, within the boundary layer of the switching function.
Stability: The sliding surface boundary is maintained post-failure, confirming that the allocation matrix correctly redistributes commanded torque.

Hardware Integration & Functional Testing
Closed-Loop Response: The prototype demonstrates a fully functional control. The quaternion angle is passed to the controller, and each reaction wheel is driven to counteract the current attitude error.
Mechanical Integrity: The 3D-printed internal structure and aluminum flywheels remained stable during high-RPM testing, confirming the viability of the compact 1U layout.

5. Conclusion & Further Improvement:

The design has proven to provide robust control and adequate torque in the constraints of a CubeSat module.

Power Efficiency: Future work includes optimizing power through intelligent torque allocation, using sensors to track motor health.
System Expansion: Adding magnetorquers and star-tracking sensors would provide full ADCS (Attitude Determination and Control System) capability.
Final Validation: Future testing on a 3-axis air-bearing table is planned to verify the simulated fault-tolerance in a zero-friction environment.

6. References

[1] Y. S. Lee, N. P. Nguyen, and S. K. Hong, "Active fault-tolerant control scheme for satellite with four reaction wheels: Multi actuator faults case," IET Control Theory & Applications, vol. 19, no. 1, Jan. 2025. [Online]. Available: https://doi.org/10.1049/ctm2.70000.

[2] M. A. Farooqi, "NCS-34a-Sliding Mode Control-Basic Concept," YouTube, Dec. 01, 2023. [Online]. Available: https://www.youtube.com/watch?v=AQ9BJEJ8nKw (accessed Dec. 11, 2024).

[3] The CubeSat Program, "CubeSat Design Specification Rev. 14," California Polytechnic State University, San Luis Obispo, CA, USA, 2022.

[4] B. Wie, Space Vehicle Dynamics and Control, 2nd ed. Reston, VA, USA: AIAA Education Series, 2008.