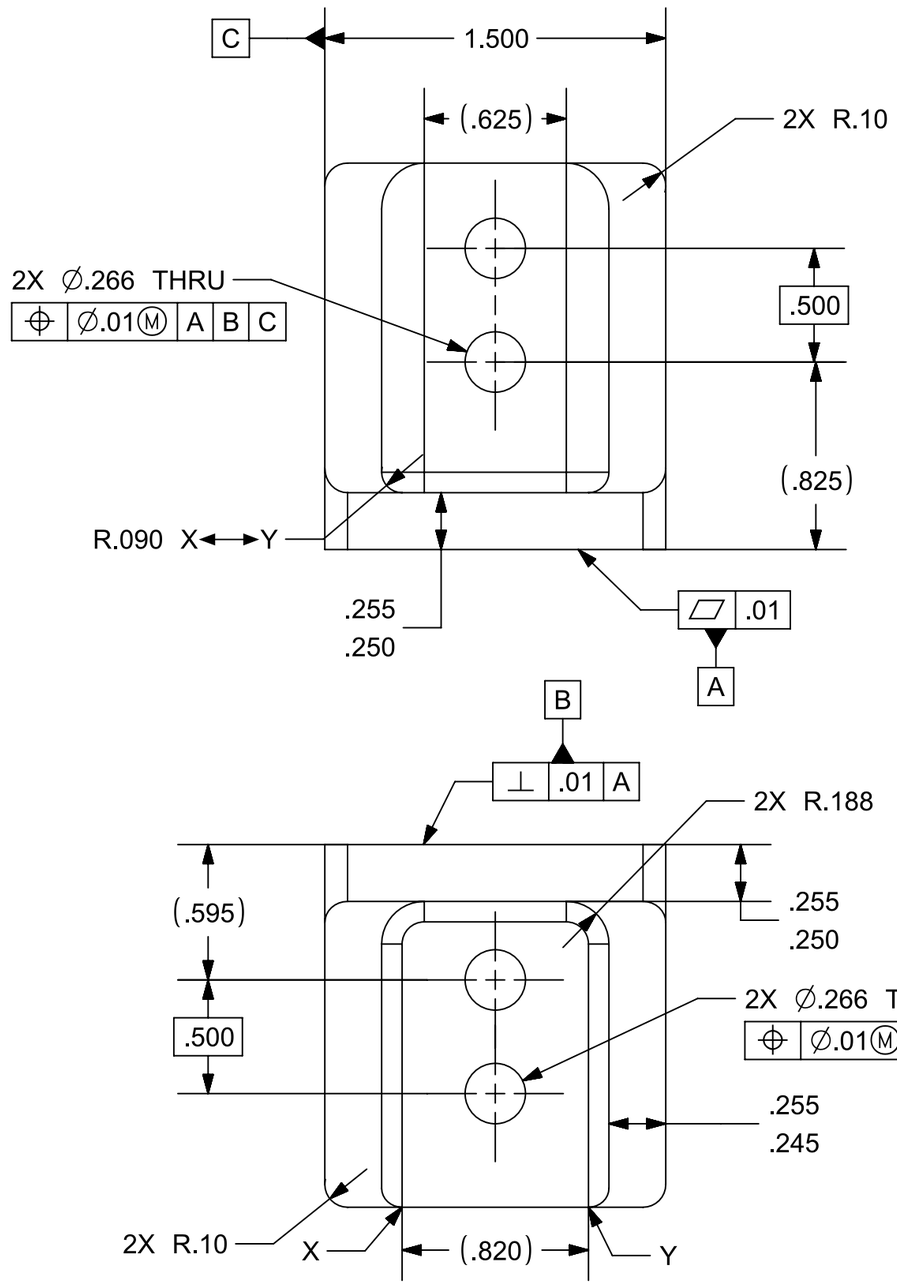

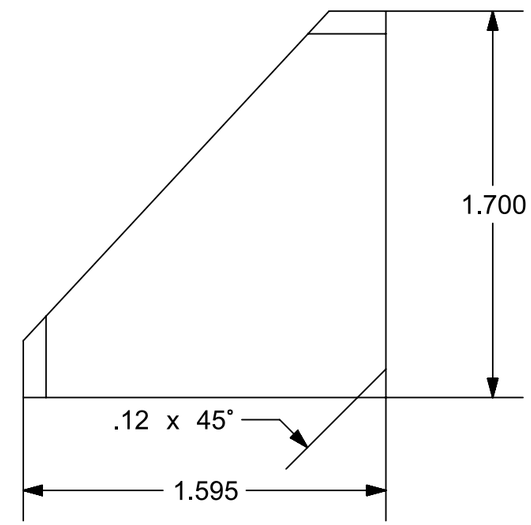

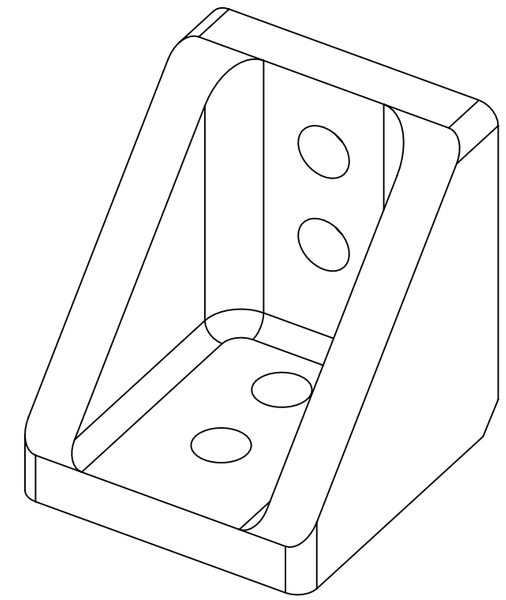

NOTES:
1. BREAK ALL EDGES WITH CHAMFER NO LARGER THAN .010
2. All SURFACES ⌓ .020 A B C UNLESS OTHERWISE SPECIFIED

ALL DIMENSIONS IN INCHES

GENERAL TOLERANCES
X.X ± 0.1
X.XX ± 0.02
X.XXX ± 0.005
X.XXXX ± 0.0005
GENERAL SURFACE FINISH 125μIN

TWOCAN TEAM	
ENGINEER	`
DRAWN BY	M. LEWTON
CHECKED BY	

PART NUMBER - TITLE

C105-003 CONNECTOR BRACKET

SIZE	MATERIAL	SHEET REV
B	ALUMINUM 7055-T74511	A

SCALE 3:2 | SHEET 1 OF 1