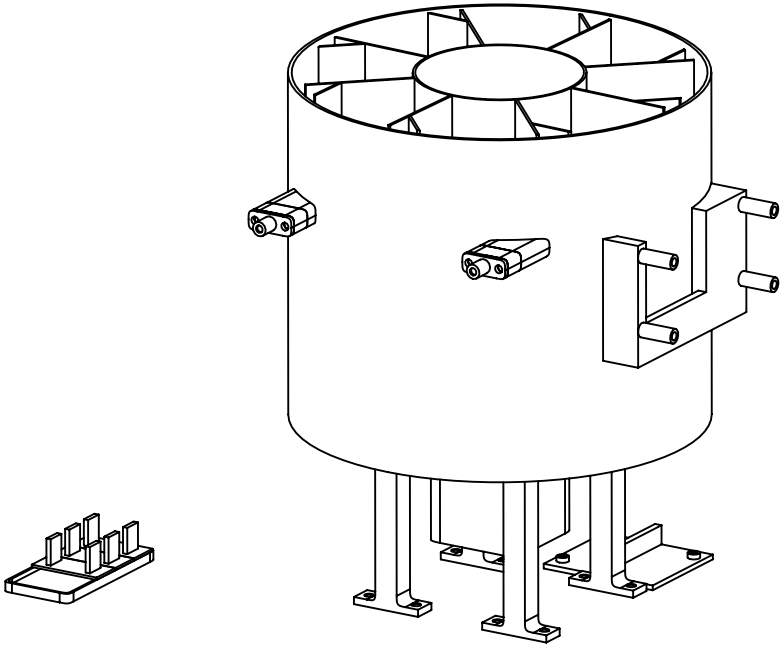

PC NO	PART NAME	QTY
17	C202-017 STEPPER RISER	3
16	C202-018 IR SENSOR SPACER	2
15	C202-016 JUMBOTRON PIN	1
14	C202-015 BUCK RAFT	1
13	C202-014 STEPPER RAFT	1
12	C202-013 JUMBOTRON	1
11	C202-002 HOUSING	1
10	C202-011 IR SENSOR HOLDER	2
9	C202-010 IR SENSOR MOUNT RIGHT MIRROR	1
8	C202-009 IR SENSOR MOUNT	1
7	C202-008 COLOR SENSOR SHROUD	1
6	C202-007 SHELF	1
5	C202-006 KEY	1
4	C202-005 MOTOR PLATE	1
3	C202-004 STRUT	2
2	C202-001 IMPELLER	1
1	STEPPER	1

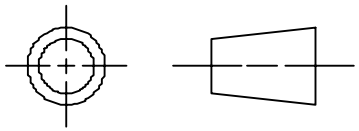

ALL DIMENSIONS IN MM

SIEMENS

THIS DRAWING HAS BEEN PRODUCED USING AN EXAMPLE TEMPLATE PROVIDED BY SIEMENS PLM SOFTWARE

FIRST ISSUED	Matt Lewton
DRAWN BY	Matt Lewton
CHECKED BY	
APPROVED BY	

TITLE

SIZE	DRG NO.	SHEET REV
A4	C202-501 RADIAL STORAGE ASSEMBLY	A

SCALE 1:1 | SHEET 1 OF 2

A4

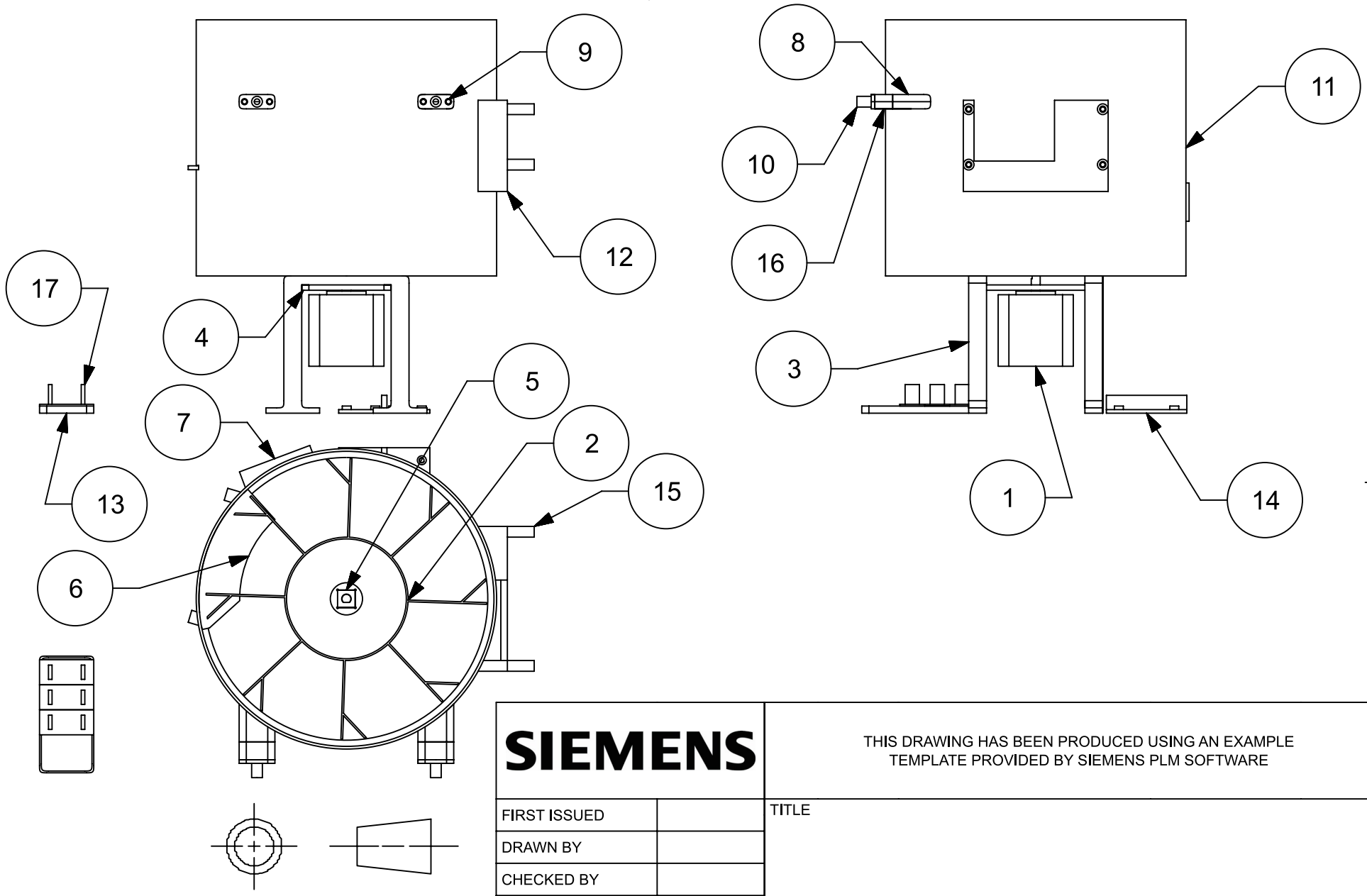

ALL DIMENSIONS IN MM

SIEMENS

THIS DRAWING HAS BEEN PRODUCED USING AN EXAMPLE TEMPLATE PROVIDED BY SIEMENS PLM SOFTWARE

FIRST ISSUED	
DRAWN BY	
CHECKED BY	
APPROVED BY	

TITLE

SIZE	DRG NO.	SHEET REV
A4	C202-501 RADIAL STORAGE ASSEMBLY	A
SCALE 1:1		SHEET 2 OF 2

A4