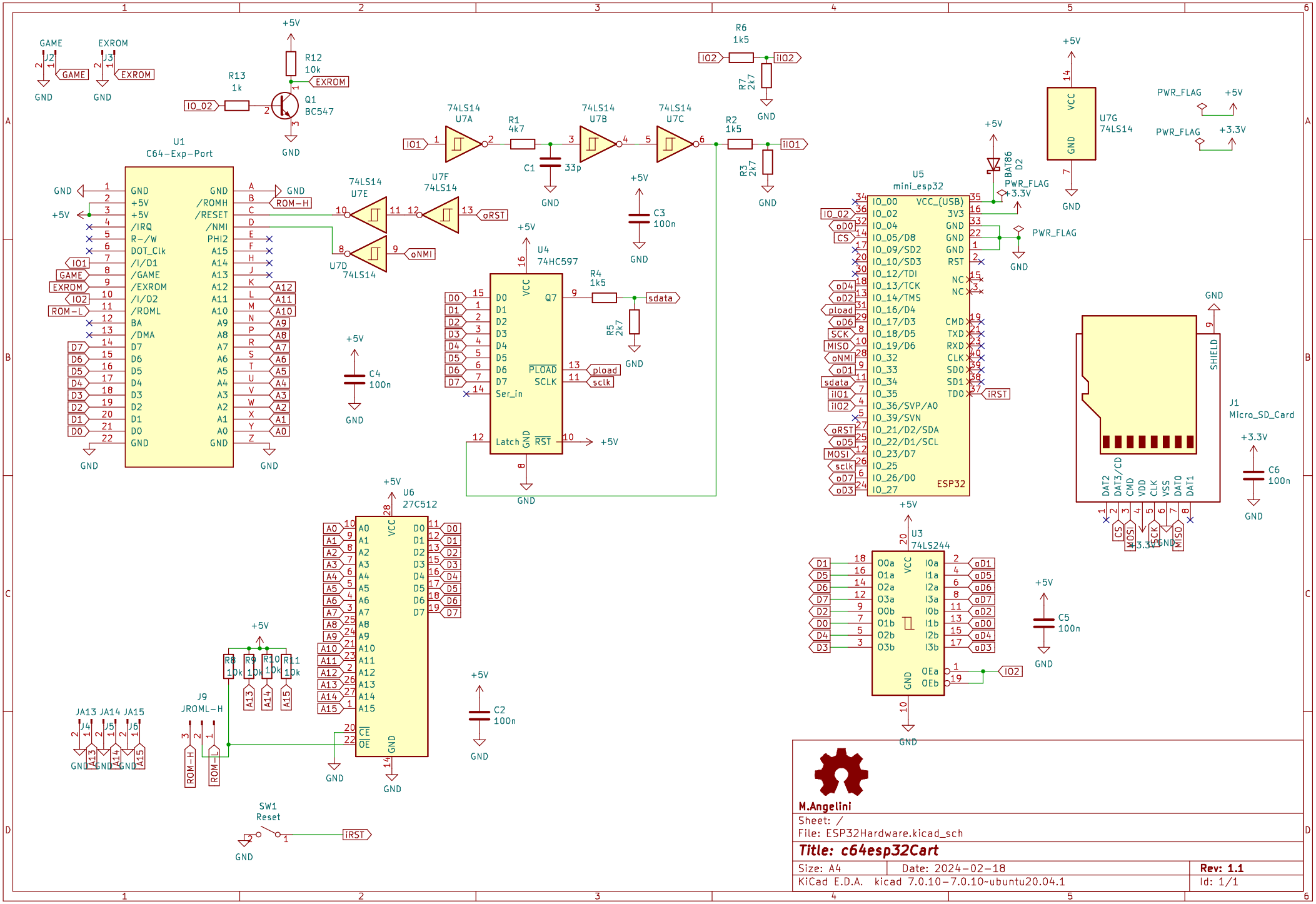
U1
C64-Exp-Port
U5
mini_esp32
ESP32
U4
74HC597
U6
27C512
U3
74LS244
U7A
U7B
U7C
U7D
U7E
U7F
U7G
74LS14
J1
Micro_SD_Card
J9
JROML-H
SW1
Reset
Q1
BC547
R1
4k7
R2
1k5
R3
2k7
R4
1k5
R5
2k7
R6
1k5
R7
2k7
R12
10k
R13
1k
C1
33p
C2
100n
C3
100n
C4
100n
C5
100n
C6
100n
D2
BAT86
PWR_FLAG
+5V
+3.3V
GND
sdata
pload
sclk
oRST
oNMI
iRST
iIO1
iIO2
IO_02
ROM-H
ROM-L
EXROM
GAME
M.Angelini
Sheet: /
File: ESP32Hardware.kicad_sch
Title: c64esp32Cart
Size: A4
Date: 2024-02-18
Rev: 1.1
KiCad E.D.A. kicad 7.0.10-7.0.10~ubuntu20.04.1
Id: 1/1