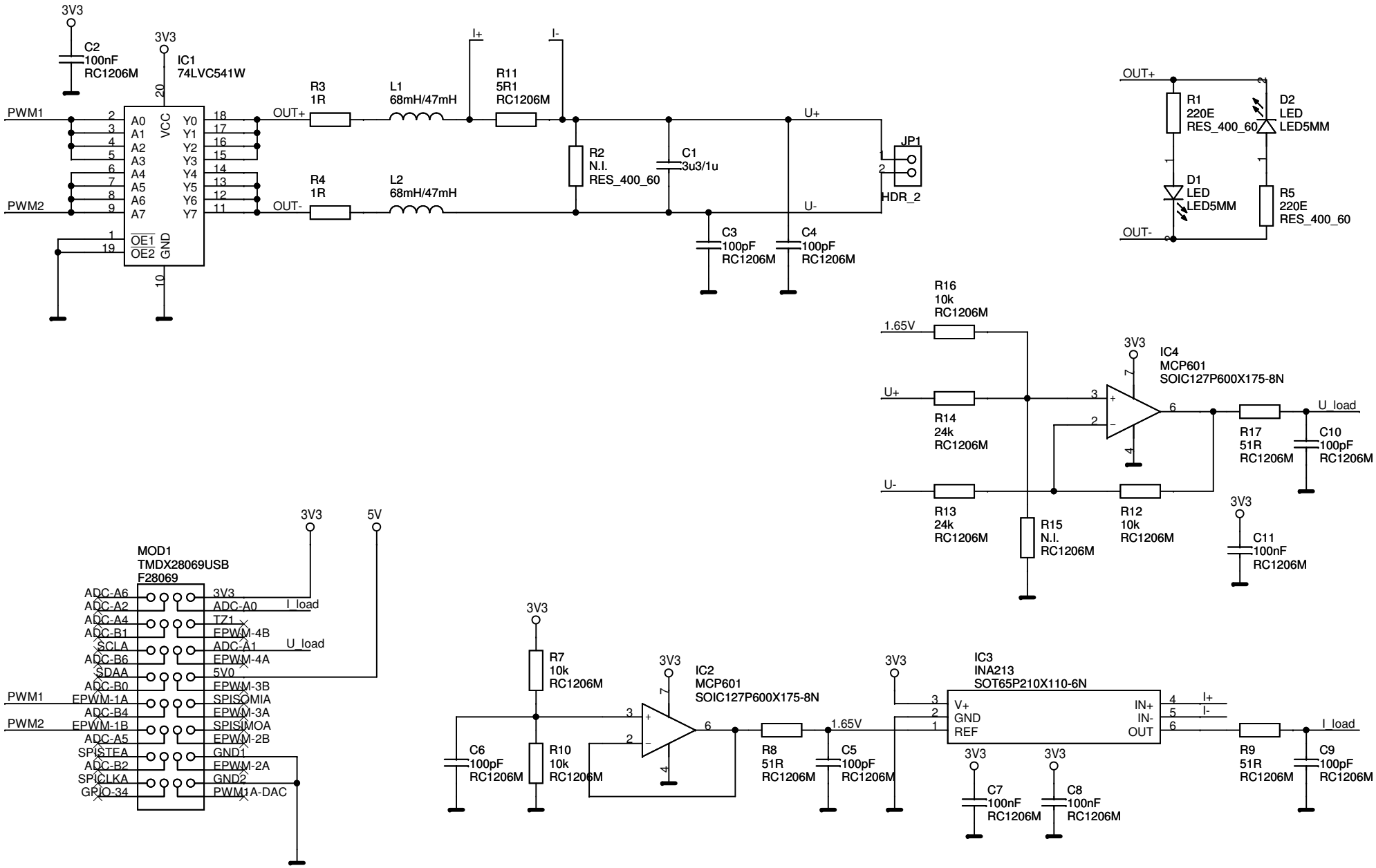

Title	Bipolrani RLC	
Size A4	Document Number Bipolrani RLC	Rev 3
Date: Thursday, October 15, 2015	Sheet 1 of 1	