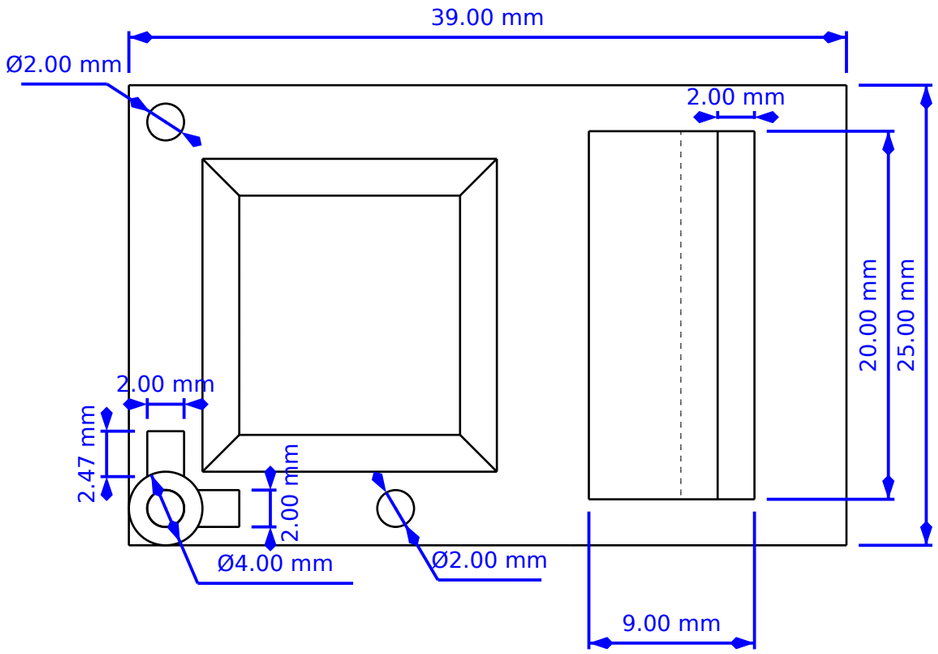

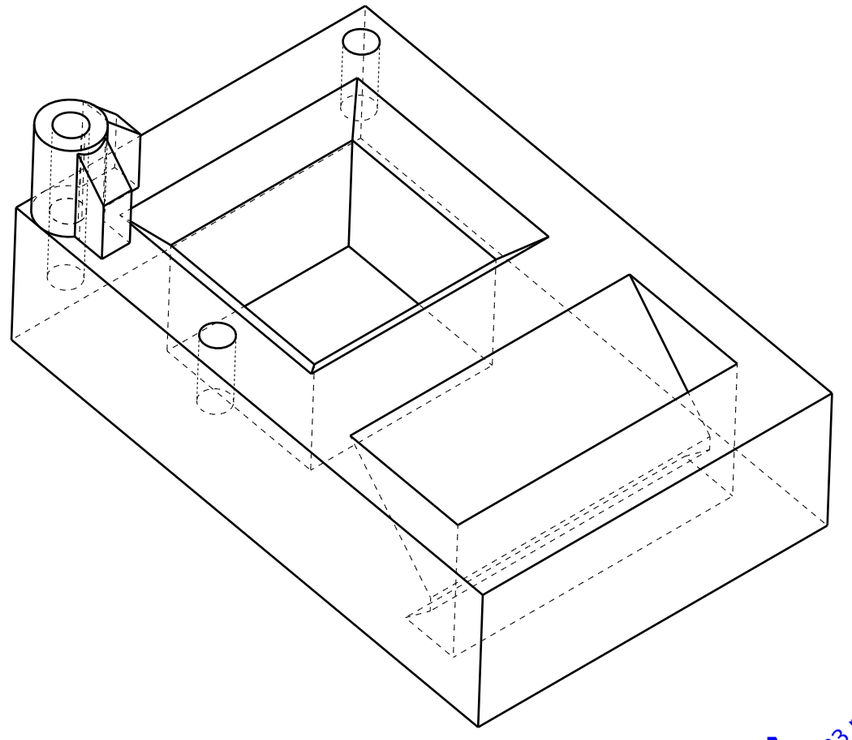

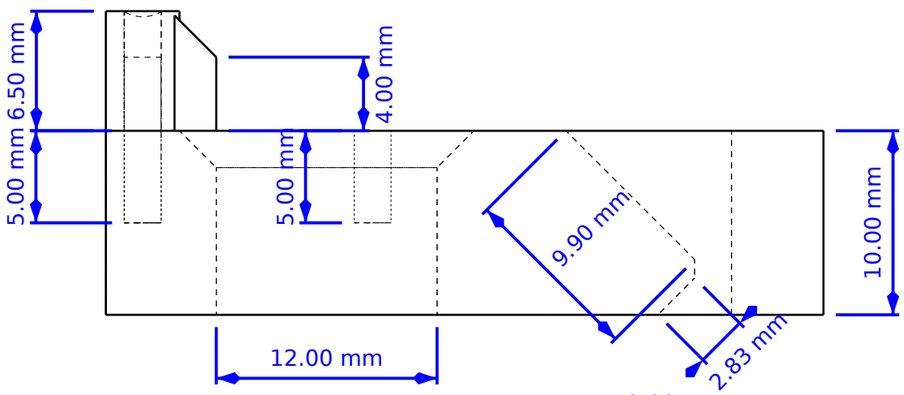

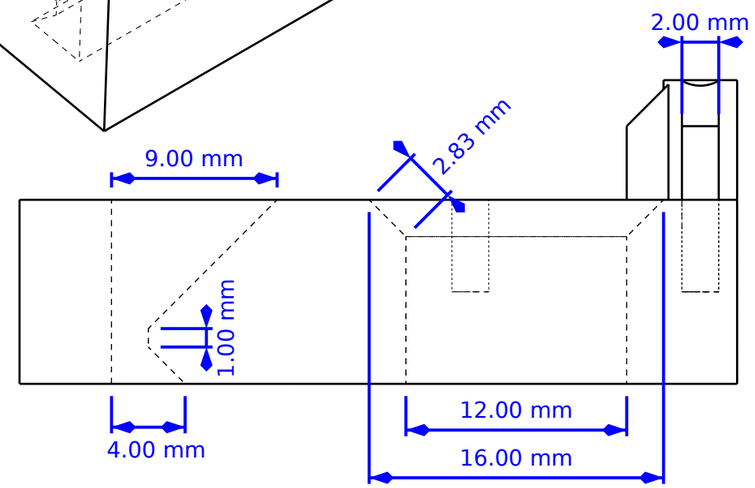

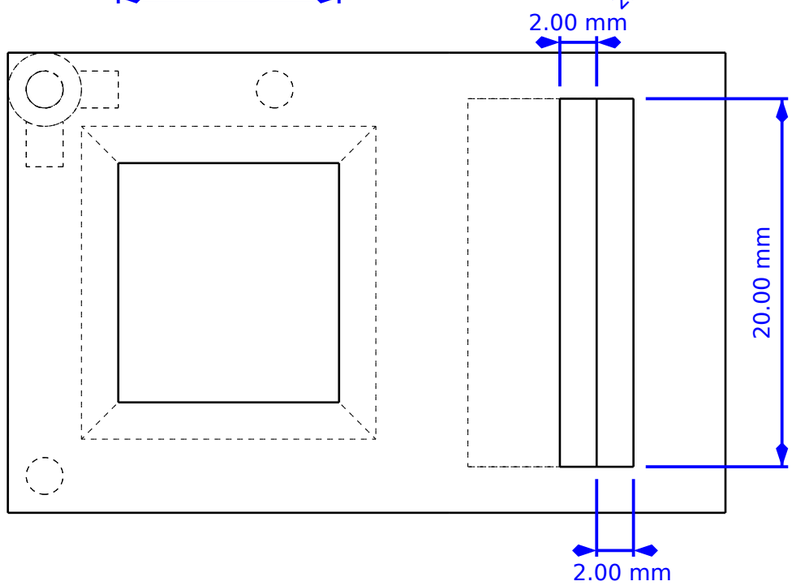

DESIGNED BY: Iván Rodríguez		# Soporte móvil para cámaras
DATE: 01/06/2018		Ajustador de orientación de cámaras
CHECKED BY: Fernando Rosa		
DATE: 25/06/2018		
SIZE A3		Universidad de La Laguna · open source hardware
SCALE 3:1	WEIGHT (kg) ND	DRAWING NUMBER Nº12 · SHEET 1

This drawing is our property; it can't be reproduced or communicated without our written agreement.