# AUTOMATION SYSTEM USING ARDUINO WITH GSM MODULE

A Project report Submitted in partial fulfillment of the Requirements for the award of the degree of

BACHELOR OF TECHNOLOGY

IN

ELECTRICAL A ND ELECTRONICS

ENGINEERING

Submitted by


| | |
|---|---|
| M.LAKSHMI SRAVANTHI | 17B25A0205 |
| M.SATISH KUMAR | 16B21A0206 |
| P.PRAKYA | 16B21A0203 |
| J.H.S.PRIYANKA | 17B25A0202 |
| M.LALITHA DEVI | 17B25A0204 |

Under the esteemed guidance of

**Mr. K.N.S.K SANTHOSH, M. Tech**

Assistant Professor

**DEPARTMENT OF ELECTRICAL AND ELECTRONICS ENGINEERING**

**KAKINADA INSTITUTE OF ENGINEERING AND TECHNOLOGY**

**(APPROVED BY AICTE AND AFFILIATED TO JNTU, KAKINADA)**

**KAKINADA-YANAM ROAD, KORANGI -533461.**


**2016-2020**

# CERTIFICATE

## DEPARTMENT OF ELECTRICAL AND ELECTRONICS ENGINEERING

## KAKINADA INSTITUTE OF ENGINEERING AND TECHNOLOGY

**(APPROVED BY AICTE AND AFFILIATED TO JNTU, KAKINADA)**
**KAKINADA-YANAM ROAD, KORANGI -533461.**

This is to certify that the Thesis/Dissertation entitled "AUTOMATION SYSTEM USING ARDUINO WITH GSM MODULE" is submitted by M.LAKSHMI SRAVANTHI (17B25A0205),M.SATISH KUMAR (16B21A0206),P.PRAKYA (16B21A0203), J.H.S.PRIYANKA (17B25A0202), M.LALITHA DEVI (17B25A0204) in partial fulfillment of the requirement for the award of the degree of **Bachelor of Technology in ELECTRICAL AND ELECTRONICS ENGINEERING** to the **KAKINADA INSTITUTE OF ENGINEERING AND TECHNOLOGY** is a record of bonafide work carried out by him under my guidance and supervision. The results embodied in this thesis have not been submitted to any other university or institute for the award of any degree or diploma.

**Project Guide/supervisor**
**Mr. K.N.S.K. SANTHOSH, M. Tech**
**Assistant professor**

**Head of the Department**
**Mr. K.N.S.K. SANTHOSH, M. Tech**
**Assistant Professor and Head**

**External Examiner**

# ACKNOWLEDGEMENT

We express my profound sense of gratitude to my guide Sri. K.N.S.K SANTHOSH, M.Tech Assistant Professor, Department Of Electrical And Electronics Engineering, Kakinada Institute Of Engineering And Technology For JNT University, Kakinada for his systematic guidance and valuable advices. his encouragement and suggestions were of immense help to me throughout my project work.

We would like to express my sincere gratitude to Sri. K.N.S.K SANTHOSH, M.Tech Assistant Professor, Head of the Department, for providing me with all the necessary facilities for this work.

We would also like to thank all the faculty members, technical staff and non-teaching staff members of eee department, who extended full cooperation for completion of this work.

We take the opportunity to thank all my well wishes who helped me through their patient discussions, suggestions and for their timely help at various stages in completion of this work.

PROJECT ASSOCIATE:

| | |
|---|---|
| **M.LAKSHMI SRAVANTHI** | **17B25A0205** |
| **M.SATISH KUMAR** | **16B21A0206** |
| **P.PRAKYA** | **16B21A0203** |
| **J.H.S.PRIYANKA** | **17B25A0202** |
| **M.LALITHA DEVI** | **17B25A0204** |

# DECLARATION

I hereby declared that the project work entitled " **AUTOMATION USING ARDUINO WITH GSM MODULE**" submitted to " **Kakinada Institute Of Engineering And Technology**" Mr. K.N.S.K SANTOSH assistant professor in the department of electrical and electronics engineering and this project work submitted in the partial fulfillment of the requirement for the award of the degree of the Bachelor of Technology. The results embodied in this thesis have not been submitted to any other university or institute for the award of any degree or diploma.

I further declare that I or any other person has not previously submitted this project report to any other institute or university for any other degree or diploma.

**PLACE:**

**DATE**

| | |
|---|---|
| **M.LAKSHMISRAVANTHI** | **17B25A0205** |
| **M.SATISH KUMAR** | **16B21A0206** |
| **P.PRAKYA** | **16B21A0203** |
| **J.H.S.PRIYANKA** | **17B25A0202** |
| **M.LALITHA DEVI** | **17B25A0204** |

# CONTENTS


| Description | Pg.no |
|---|---|
| **List of Components Used** | i |
| **List of Figures** | **ii** |
| **List of Table** | **iii** |
| **Abbreviations** | **iv** |
| **Abstract** | **vi** |
| **CHAPTER-1** | **1-3** |
| **1.1 Introduction** | 1 |
| 1.2 Types of Automation Systems | 1 |
| 1.2.1 Industrial Automation | 2 |
| 1.2.2 Home Automation | 3 |
| **CHAPTER-2** | **5-37** |
| **2.1 Arduino Uno** | 5 |
| 2.1.1 Technical Specifications | 5 |
| 2.1.2 Arduino Pin Description | 6 |
| 2.1.3 How to Program An Arduino | 8 |
| 2.1.4 How Can Arduino Be Connected | 8 |
| 2.1.5 What Are The Applications of Arduino | 9 |
| **2.2 GSM Module** | 10 |
| 2.2.1 SIM 900A GSM Module | 10 |
| 2.2.2 SIM 900A GSM Module Features | 14 |
| 2.2.3 Applications | 15 |
| 2.2.4 Similar Modules | 15 |
| 2.2.5 How To Use SIM900A Module | 16 |

2.2.6 LED status indicators 17

2.2.7 Antenna 18

2.2.8 SIM Socket 19

2.2.9 Hardware Trigger 19

2.2.10 Software Trigger 20

2.2.11 Powering up/down SIM900 Chip 20

2.2.12 Suppling Power for SIM900 Shield 22

**2.3 RELAY** 23

2.3.1 Pin Description 23

2.3.2 Features of 5-Pin 5V Relay 24

2.3.3 Equivalent Relays 24

2.3.4 How to Use a Relay 24

2.3.5 Applications of Relay 25

**2.4 16x2 LCD DISPLAY 26**

2.4.1 Introduction to 16X2 LCD 26

2.4.2 Types of Registers used in LCD 26

2.4.3 Pin diagram of 16*2 LCD 27

2.4.4 Important command codes for LCD 29

2.4.5 Interfacing 16*2 LCD with Arduino 30

**2.5 BUCK CONVERTER** 32

2.5.1 LM2596 Introduction 32

2.5.2 Pin Diagram of LM2596 33

2.5.3 Package Include 34

2.5.4 Board Schematic 34

2.5.5 Features of Buck Converter LM2596 34

2.5.6 Applications of LM2596 34

2.5.7 How to use the LM2596 Regulator? 35

2.5.8 Calculating output voltage for LM2596 35

**CHAPTER-3** 36

**WORKING** 36

**CHAPTER -4** 37-53

**PROGRAMMING** **37**

4.1 LCD Display 37

4.2 GSM SIM 900 Programming 45

**CHAPTER-5** **54**

**CONCLUSION** **54**

## LIST OF COMPONENETS USED

Arduino ATmega328P

GSM SIM 900

Relays

Resistors

Transistor 2N2222

IN4007 Diode

LED

Printed circuit board

PN Junction Diode

16*2 LCD Display

Buck converter

Adapter

# LIST OF FIGURES


| Fig no | Name Of The Figure | Pg.no |
|---|---|---|
| Fig no:1.1 | Industrial Robots | 2 |
| Fig no:1.2 | Home automation | 3 |
| Fig no:1.3 | Wireless automation | 4 |
| Fig no:2.1 | Arduino pin description | 5 |
| Fig no:2.2 | Pin Description of GSM module SIM 900 | 10 |
| Fig no:2.3 | Interfacing GSM SIM 900 with Arduino | 16 |
| Fig no:2.4 | Real view of GSM SIM 900 | **17** |
| Fig no:2.5 | LED Status Indicators | 17 |
| Fig No:2.6 | Antenna | 18 |
| Fig no:2.7 | SIM Socket | 19 |
| Fig no:2.8 | Hardware Trigger | 19 |
| Fig no:2.9 | Software trigger | 20 |
| Fig no:2.10 | Supplying Power for SIM900 Shield | 21 |
| Fig no:2.11 | view of relay | 23 |
| Fig no:2.12 | Pin diagram of relay | 23 |
| Fig no:2.13 | Internal Circuit diagram of relay | 24 |
| Fig no:2.14 | Display view of 16*2 LCD | 26 |
| Fig no:2.15 | Pin description of 16*2 LCD Display | 27 |
| Fig no:2.16 | Interfacing 16*2 LCD with Arduino | 30 |
| Fig no:2.17 | Buck converter | 32 |
| Fig No:2.18 | Pin Diagram Of LM2596 | 33 |
| Fig no:2.19 | Schematic Diagram of LM2596 | 34 |
| Fig no:2.20 | LM2596 DC Converter module. | 35 |
| Fig no:3.1 | Block diagram of working of Kit | 36 |

# LIST OF TABLE


| Table No | Name Of The Table | Pg.no |
|---|---|---|
| Table No:2.1 | Pin Description Of Arduino | 8 |
| Table No:2.2 | SIM900A GSM Module Pin Out Configuration | 14 |
| Table No:2.3 | Supplying Power For Sim900 Shield | 21 |
| Table No:2.4 | Relay Pin Configuration | 23 |
| Table No:2.5 | Pin Description Of 16*2 LCD Display | 29 |
| Table No:2.6 | Important Command Codes For LCD | 30 |
| Table No:2.7 | Pin Description Of LM2596 | 33 |

# ABBREVIATIONS

| | | |
|---|---|---|
| SRAM | - | Static Random Access Memory |
| EEPROM | - | Electrically Erasable Programmable Read Only Memory |
| USB | - | Universal Service Bus |
| GND | - | Ground |
| AVR | - | Automatic Voltage Regulator |
| ICSP | - | In- Circuit Serial Programming |
| TX | - | Transmitter |
| RX | - | Receiver |
| LED | - | Light Emitting Diode |
| AREF | - | Analog Reference |
| IOT | - | Internet of Things |
| USART | - | Universal Synchronous/Asynchronous Receiver And Transmitter |
| MCU | - | Micro Controller Unit |
| FHSS | - | Frequency Hopping Spread Spectrum |
| SIM | - | Subscriber Identification Mode |
| EGSM | - | Extended Global System for Mobile Communication |
| PDA | - | Personal Digital Assistant |
| GPRS | - | General Packet Radio Service |
| ADC | - | Analog to Digital Converter |
| PWM | - | Pulse Width Modulation |
| RF | - | Radio Frequency |
| USSD | - | Unstructured Supplementary Service Data |
| SMS | - | Short Message Service |
| MIC | - | Minimum Inhibitory Concentration |

| | | |
|---|---|---|
| UART | - | Universal Asynchronous Receiver-Transmitter |
| IC | - | Integrated circuits |
| IDE | - | Integrated Development Environment |
| MOSI | - | Master Out Slave In |
| MISO | - | Master In Slave Out |
| SPI | - | Serial Peripheral Interface |
| OTG | - | On-The Go |
| PAN | - | Personal Access Network |
| TTL | - | Transistor -Transistor Logic |
| DCD | - | Data Carrier Detect |
| DSR | - | Data Set Ready |
| CTS | - | Clear To Send |
| RTS | - | Request To Send |
| CLK | - | Clock |
| SPK_P | - | Speaker Positive |
| SPK_N | - | Speaker Negative |
| SDA | - | Serial Data |
| SCL | - | Serial Clock |
| VBAT | - | Voltage Battery |
| GPIO | - | General Purpose Input Output |

# ABSTRACT

This project deals with the home automation which is one of the major growing industries that can change the way people live. Some of these home automation systems target those seeking luxury and sophisticated home automation platforms; others target those with special needs like the elderly and disabled. Typical wireless home automation system allows one to control household appliances from a centralized control unit which is wireless. The problem lies with the situation of the elderly or disabled people, who cannot usually help themselves to move around and might require external assistance. People who live around might also need a helping hand at home. Therefore a voice activated home automation system is designed.

# CHAPTER-1

# INTRODUCTION

## 1.1 INTRODUCTION

Automation is the technology by which a process or procedure is performed with minimal human assistance. Automation or automatic control is the use of various control systems for operating equipment such as machinery, processes in factories, boilers and heat treating ovens, switching on telephone networks, steering and stabilization of ships, aircraft and other applications and vehicles with minimal or reduced human intervention.

Automation covers applications ranging from a house hold thermostat controlling a boiler, to a large industrial control system with tens of thousands of input measurements and output control signals. In control complexity, it can range from simple on-off control to multi-variable high-level algorithms.

Automation has been achieved by various means including mechanical, hydraulic, pneumatic, electrical, electronic devices and computers, usually in combination. Complicated systems, such as modern factories, airplanes and ships typically use all these combined techniques. The benefit of automation includes labor savings, savings in electricity costs, savings in material costs, and improvements to quality, accuracy, and precision.

A simple definition for home automation is the ability to do tasks automatically and monitor or change status remotely. Common tasks include turning off lights when no one is in the room, locking doors via smartphone, automates air condition systems that can sense and memorize temperature settings and appliances that help you reduce the time you spend in the kitchen.

## 1.2 Types of Automation Systems

The automation system replaces the conventional hard-wired relay system by automating the process functions with the use of various hardware and software tools with minimal human intervention. There are different types of automation systems are used in different applications, but all automated systems are not similar. Depends on application area and control nature, these automated systems are classified. Some of these automation types are discussed in brief below.

### 1.2.1 Industrial Automation

Industrial automation is the process of making industrial production processes more flexible and simpler at higher efficiencies. Automation integration to the industries results intelligent manufacturing solutions at improved product quality and productivity with reduced downtime and wastes. Industrial automation involves in

usage of usage of various control devices such as PC/PLC's, various sensors and actuators, communication buses/modules, machine drives, HMI (Human Machine Interface) systems and other control equipments.

This type automation is most popularly used in automotive, computer and electronics, medical, telecommunication, consumer goods and other industrial applications. The automation systems can be a fixed, programmed, flexible and integrated systems. Some of the types of industrial automation are given below.

- **Numerically Controlled Machines**

These machines are of computer controlled machines which uses computers to perform the control operations by acquiring, processing, calculating and controlling the process variables. This automation is a programmed version of machine tools and also called as Computerized Numerical Controlled (CNC) Machines. These CNC machines are used in cutting and milling applications for high accuracy and accurate precision operation.

- **Computer – Aided Manufacturing (CAM)**

In this, the entire manufacturing process (includes production, planning and control) is automated with the use of numerically controlled machines, industrial robots and other types of automation devices. These automation systems also make use of computers to plan, design and layout the various products. Examples of this automation systems are computer-aided design (CAD), computer-aided design and drafting (CADD) and computer-aided process planning (CAPP).

- **Industrial Robots**

These are a type of automated machines or equipment's that can perform the different tasks for longer duration. These are mostly implemented in the areas that are highly dangerous or hazardous for humans.

Fig no:1.1 Industrial Robots

- **Flexible Manufacturing Systems**

This automation is of fully automated one. Starting from planning and designing process to dispatching of products, the whole system is completely integrated to be automated. This automation combines numerically controlled machines, industrial robots and other automation equipment's into one integrated system.

### 1.2.2 Home Automation

As the technologies are rapidly advancing that affects the human daily lives more flexible, particularly in controlling home appliances. Electrical installations are the heart of every building, therefore intelligent building control absolutely ensures the safety and efficient control and eventually saves the electric power consumption and human energy. Home automation system does the operations like lighting control and regulation, regulating HVAC (Heating, Ventilation and Air Conditioning) equipment's, energy and load management, security and monitoring, audio/ video systems, HMI's and other control tasks.

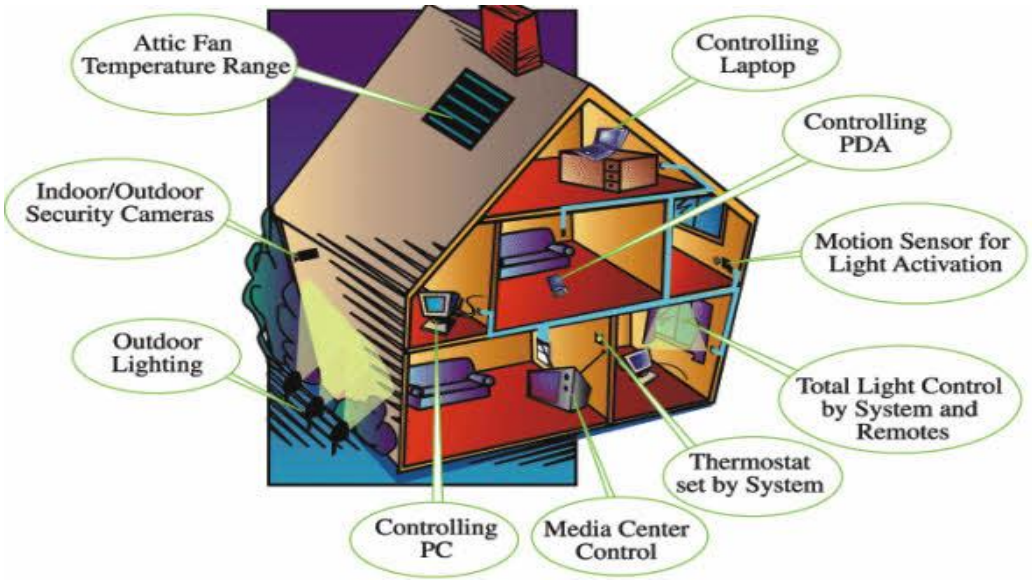


Fig no:1.2 Home automation

Home automation uses the various sensors to sense parameters like temperature, pressure, motion, illumination, etc and sends these signals to central controllers. These controllers are programmable devices like PLCs which are programmed according to the application it is employed for. Therefore, these controllers get the inputs from sensors and correspondingly sends the control signals to actuating devices like relays. Some of the types of home automation system are given below.

- **Power Line Home Automation System**

  This automation is of low cost since it uses power lines to transfer the information or data therefore it doesn't require additional cables for transferring the information. However, this system is of little bit complex one that necessitates additional converter circuits.

- **Wired Home Automation System**

  This type of automation uses a common communication bus to which all the equipment in homes are connected. This communication bus or cable is connected to a main controller (programmable logic controller) in order to acquire input signals and to send control command signals to the actuators.

- **Wireless Home Automation**

  This is an advanced automation technology as compared with wired automation. This automaton uses wireless technologies like RF, Zigbee, GSM, WI-Fi and Bluetooth for achieving remote control operation. This is a flexible type of automation requires negligible wires to connect different appliances in homes to the central control unit.

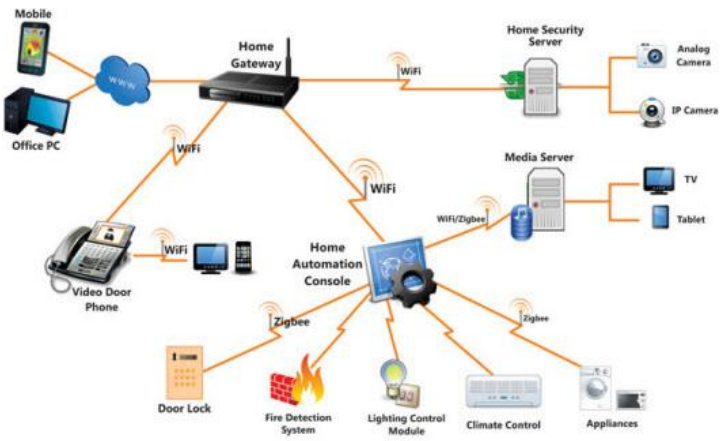


Fig no:1.3 Wireless automation

These are the two types of automation system that has been implementing in most of the industries and homes. Overall quality, accuracy, productivity, reduced labour costs and safety are better arguments for the automation systems. Hope you are familiar with these two automation system

# CHAPTER-2

## 2.1 ARDUINO UNO

The different components on the Arduino board. We will study the Arduino UNO board because it is the most popular board in the Arduino board family. In addition, it is the best board to get started with electronics and coding. Some boards look a bit different from the one given below, but most Arduinos have majority of these components in common. It is basically used in communications and in controlling or operating many devices.

### 2.1.1 Arduino Pin Description

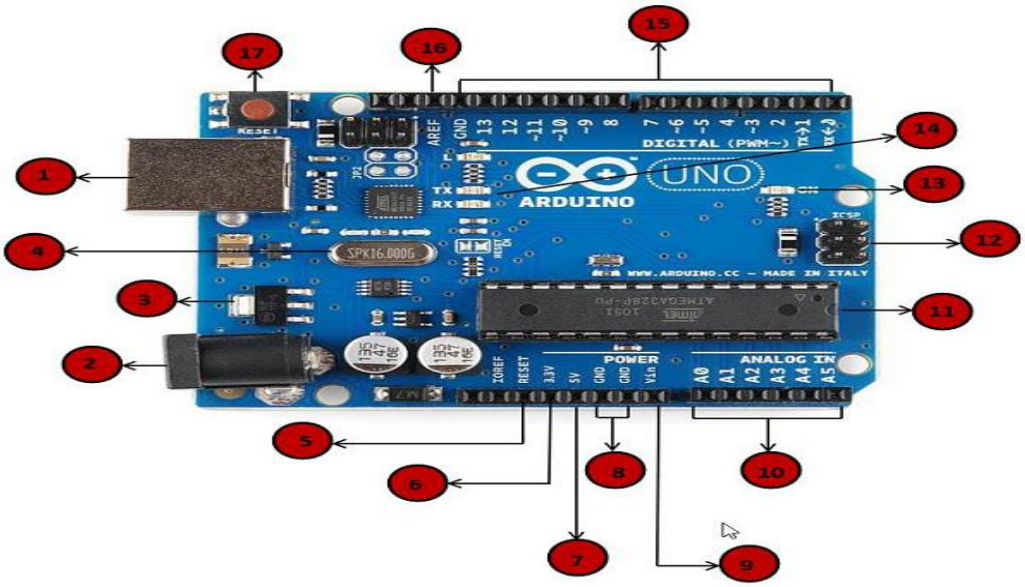


Fig no:2.1 Arduino pin description

### 2.1.2 Technical specifications

**Microcontroller:** Microchip ATmega328P

- Operating Voltage: 5 Volts
- Input Voltage: 7 to 20 Volts
- Digital I/O Pins: 14 (of which 6 can provide PWM output)
- Analog Input Pins: 6
- DC Current per I/O Pin: 20 mA
- DC Current for 3.3V Pin: 50 mA
- Flash Memory: 32 KB of which 0.5 KB used by **boot loader**
- SRAM: 2 KB
- EEPROM: 1 KB
- Clock Speed: 16 MHz
- Length: 68.6 mm

- Width: 53.4 mm
- Weight: 25

**PIN DISCRIPTION:**

| | |
|---|---|
| **1** | **Power USB**<br>Arduino board can be powered by using the USB cable from your computer. All you need to do is connect the USB cable to the USB connection (1). |
| **2** | **Power (Barrel Jack)**<br>Arduino boards can be powered directly from the AC mains power supply by connecting it to the Barrel Jack (2). |
| **3** | **Voltage Regulator**<br>The function of the voltage regulator is to control the voltage given to the Arduino board and stabilize the DC voltages used by the processor and other elements. |
| **4** | **Crystal Oscillator**<br>The crystal oscillator helps Arduino in dealing with time issues. How does Arduino calculate time? The answer is, by using the crystal oscillator. The number printed on top of the Arduino crystal is 16.000H9H. It tells us that the frequency is 16,000,000 Hertz or 16 MHz. |
| **5** | **Arduino Reset**<br>You can reset your Arduino board, i.e., start your program from the beginning. You can reset the UNO board in two ways. First, by using the reset button (17) on the board. Second, you can connect an external reset button to the Arduino pin labelled RESET (5). |
| **6,7,8,9** | **Pins (3.3, 5, GND, Vin)**<br>• 3.3V (6) − Supply 3.3 output volt<br>• 5V (7) − Supply 5 output volt<br>• Most of the components used with Arduino board works fine with 3.3 volt and 5 volt. |

| | |
|---|---|
| | • GND (8)(Ground) − There are several GND pins on the Arduino, any of which can be used to ground your circuit.<br>• Vin (9) − This pin also can be used to power the Arduino board from an external power source, like AC mains power supply. |
| **10** | **Analog pins**<br>The Arduino UNO board has six analog input pins A0 through A5. These pins can read the signal from an analog sensor like the humidity sensor or temperature sensor and convert it into a digital value that can be read by the microprocessor. |
| **11** | **Main microcontroller**<br>Each Arduino board has its own microcontroller (11). You can assume it as the brain of your board. The main IC (integrated circuit) on the Arduino is slightly different from board to board. The microcontrollers are usually of the ATMEL Company. You must know what IC your board has before loading up a new program from the Arduino IDE. This information is available on the top of the IC. For more details about the IC construction and functions, you can refer to the data sheet. |
| **12** | **ICSP pin**<br>Mostly, ICSP (12) is an AVR, a tiny programming header for the Arduino consisting of MOSI, MISO, SCK, RESET, VCC, and GND. It is often referred to as an SPI (Serial Peripheral Interface), which could be considered as an "expansion" of the output. Actually, you are slaving the output device to the master of the SPI bus. |
| **13** | **Power LED indicator**<br>This LED should light up when you plug your Arduino into a power source to indicate that your board is powered up correctly. If this light does not turn on, then there is something wrong with the connection. |

| | |
|---|---|
| **14** | **TX and RX LEDs**<br>On your board, you will find two labels: TX (transmit) and RX (receive). They appear in two places on the Arduino UNO board. First, at the digital pins 0 and 1, to indicate the pins responsible for serial communication. Second, the TX and RX led (13). The TX led flashes with different speed while sending the serial data. The speed of flashing depends on the baud rate used by the board. RX flashes during the receiving process. |
| **15** | **Digital I/O**<br>The Arduino UNO board has 14 digital I/O pins (15) (of which 6 provide PWM (Pulse Width Modulation) output. These pins can be configured to work as input digital pins to read logic values (0 or 1) or as digital output pins to drive different modules like LEDs, relays, etc. The pins labeled "~" can be used to generate PWM. |
| **16** | **AREF**<br>AREF stands for Analog Reference. It is sometimes, used to set an external reference voltage (between 0 and 5 Volts) as the upper limit for the analog input pins. |

Table No:2.1 Pin Description Of Arduino

### 2.1.3 How to program an Arduino?

The most important advantage with Arduino is the programs can be directly loaded to the device without requiring any hardware programmer to burn the program. This is done because of the presence of the 0.5KB of Boot loader which allows the program to be burned into the circuit.

### 2.1.4 How can Arduino be connected to Android?

There are basically 3 different ways in which Arduino can be connected to Android.

**1.Via USB**:

Arduinodroid: USB on the Go (OTG) allows to connect any USB device to your Android smartphone . ArduinoDroid can be used in this case. App is a fully functional IDE, which allows to code on phone, upload previously written sketches stored in your Drop box or Google drive, and compile sketches on the go.

**2.via Bluetooth Controller**:

Arduino Bluetooth Controller app can be used to sends data to board via Bluetooth, allowing to send serial data by pushing a button in the app .Off course Bluetooth module is required on to board.

**3. Using Service Blynk:**

Blynk as an IOT cloud based service, and hence it requires internet to be available. One can use either Wi-Fi or mobile data to access Blynk.

### 2.1.5 What are the Applications of Arduino?

The applications of Arduino are as follows:

- Home and industrial automation
- For making Line Follower Robot.
- They can be used in Internet of Things (IoT).
- For Automatic Opening of Dustbins with Ultrasonic Sensors.
- To measure Temperature.
- For making security devices for Home.
- Uses for making Drones

## 2.2 GSM MODULE:

GSM is a mobile communication modem; it is stands for global system for mobile communication (GSM). The idea of GSM was developed at Bell Laboratories in 1970. It is widely used mobile communication system in the world. GSM is an open and digital cellular technology used for transmitting mobile voice and data services operates at the 850MHz, 900MHz, 1800MHz and 1900MHz frequency bands.

### 2.2.1 SIM900A GSM Module:

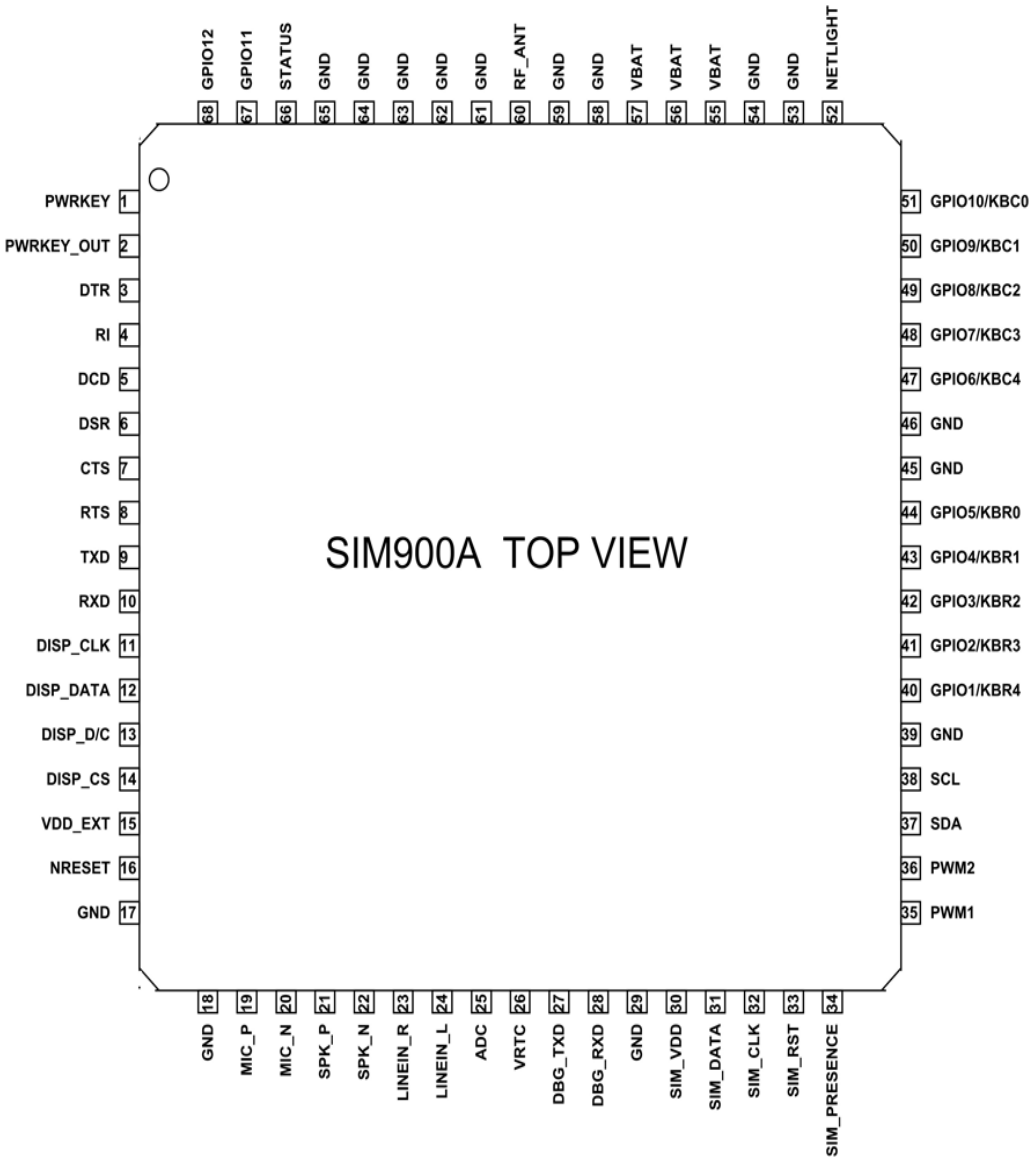


Fig no:2.2 Pin Description of GSM module SIM 900

The **SIM900A** is a readily available **GSM/GPRS module**, used in many mobile phones and PDA. The module can also be used for developing IOT (Internet of Things) and Embedded Applications. SIM900A is a dual-band GSM/GPRS engine that works on frequencies EGSM 900MHz and DCS 1800MHz. SIM900A features GPRS multi-slot class 10/ class 8 (optional) and supports the GPRS coding schemes CS-1, CS-2, CS-3 and CS-4.

**SIM900A GSM Module Pin out Configuration:**

SIM900A is a 68 terminal device as shown in **pin diagram**. We will describe the function of each pin below.

| **Pin Number** | **Pin Name** | **Description** |
|---|---|---|
| 1 | PWRKEY | Voltage input for PWRKEY. PWRKEY should be pulled low to power on or power off the system.<br>The user should keep pressing the key for a short time when power on or power off the system because the system need margin time in order to assert the software. |
| 2 | PWRKEY_OUT | Connecting PWRKEY and PWRKEY_OUT for a short time then release also can power on or power off the module. |
| 3 | DTR | Data terminal Ready [Serial port ] |
| 4 | RI | Ring indicator [Serial port ] |
| 5 | DCD | Data carry detect [Serial port ] |
| 6 | DSR | Data Set Ready [Serial port ] |
| 7 | CTS | Clear to send [Serial port ] |
| 8 | RTS | Request to send [Serial port ] |

| | | |
|---|---|---|
| 9 | TXD | Transmit data [Serial port ] |
| 10 | RXD | Receive data [Serial port ] |
| 11 | DISP _CLK | Clock for display [Display interface] |
| 12 | DISP_DATA | Display data output [Display interface] |
| 13 | DISP _D/C | Display data or command select [Display interface] |
| 14 | DISP _CS | Display Enable [Display interface] |
| 15 | VDD_EXT | 2.8V output power supply |
| 16 | NRESET | External reset input |
| 17,18,29,39,45, 46,53,54,58,59, 61,62,63,64,65 | GND | Ground |
| 19 | MIC_P | Microphone Positive |
| 20 | MIC_N | Microphone Negative |
| 21 | SPK_P | Speaker Positive |
| 22 | SPK_N | Speaker Negative |
| 23 | LINEIN_R | Right Channel input [External line inputs are available to directly mix or multiplex externally generated analog signals such as polyphonic tones from an external melody IC or music generated by an FM tuner IC or |

| | | |
|---|---|---|
| | | module.] |
| 24 | LINEIN_L | Left Channel Input |
| 25 | ADC | General purpose analog to digital converter. |
| 26 | VRTC | Current input for RTC when the battery is not supplied for the system.<br>Current output for backup battery when the main battery is present and the backup battery is in low voltage state. |
| 27 | DBG_TXD | Transmit pin [Serial interface for debugging and firmware upgrade ] |
| 28 | DBG_RXD | Receive pin [Serial interface for debugging and firmware upgrade ] |
| 30 | SIM_VDD | Voltage supply for SIM card |
| 31 | SIM_DATA | SIM data output |
| 32 | SIM_CLK | SIM clock |
| 33 | SIM_RST | SIM reset |
| 34 | SIM_PRESENCE | SIM detect |
| 35 | PWM1 | PWM Output |
| 36 | PWM2 | PWM Output |
| 37 | SDA | Serial Data [I2C] |

| | | |
|---|---|---|
| 38 | SCL | Serial Clock [I2C] |
| 40,41,42,43,44 & 47,48,49,50,51 | KBR0 to KBR4 & KBC4 to KBC0 | Keypad interface [ROWS & COLUMNS] |
| 52 | NETLIGHT | Indicate net status |
| 55,56,57 | VBAT | Three VBAT pins are dedicated to connect the supply voltage. The power supply of SIM900A has to be a single voltage source of VBAT= 3.4V to 4.5V. It must be able to provide sufficient current in a transmit burst which typically rises to 2A. |
| 60 | RF_ANT | Antenna connection |
| 66 | STATUS | Indicate working status |
| 67 | GPIO 11 | General Purpose Input/output |
| 68 | GPIO 12 | General Purpose Input/output |

Table No:2.2 SIM900A GSM Module Pin Out Configuration

### 2.2.2 SIM900A GSM Module Features

- Single supply voltage: 3.4V – 4.5V
- Power saving mode: Typical power consumption in SLEEP mode is 1.5mA
- Frequency bands: SIM 900A Dual-band: EGSM900, DCS1800. The SIM900A can search the two frequency bands automatically. The frequency bands also can be set by AT command.
- GSM class: Small MS
- GPRS connectivity: GPRS multi-slot class 10 (default) , GPRS multi-slot class 8 (option)
- Transmitting power: Class 4 (2W) at EGSM 900, Class 1 (1W) at DCS 1800
- Operating Temperature: -30ºC to +80ºC
- Storage Temperature: -5ºC to +90ºC

- DATA GPRS: download transfer max is 85.6KBps, Upload transfer max 42.8KBps
- Supports CSD, USSD, SMS, FAX
- Supports MIC and Audio Input
- Speaker Input
- Features keypad interface
- Features display interface
- Features Real Time Clock
- Supports UART interface
- Supports single SIM card
- Firmware upgrade by debug port
- Communication by using AT commands

### 2.2.3Applications

- Communication
- Robotics
- Mobile Phone Accessories
- Servers
- Computer Peripherals
- Automobile
- USB Dongles

### 2.2.4 Similar Modules

SIM800L, QUECTEL M95

### 2.2.5 How to Use SIM900A Module

For understanding the usage of the module let us consider a simple application circuit as shown below

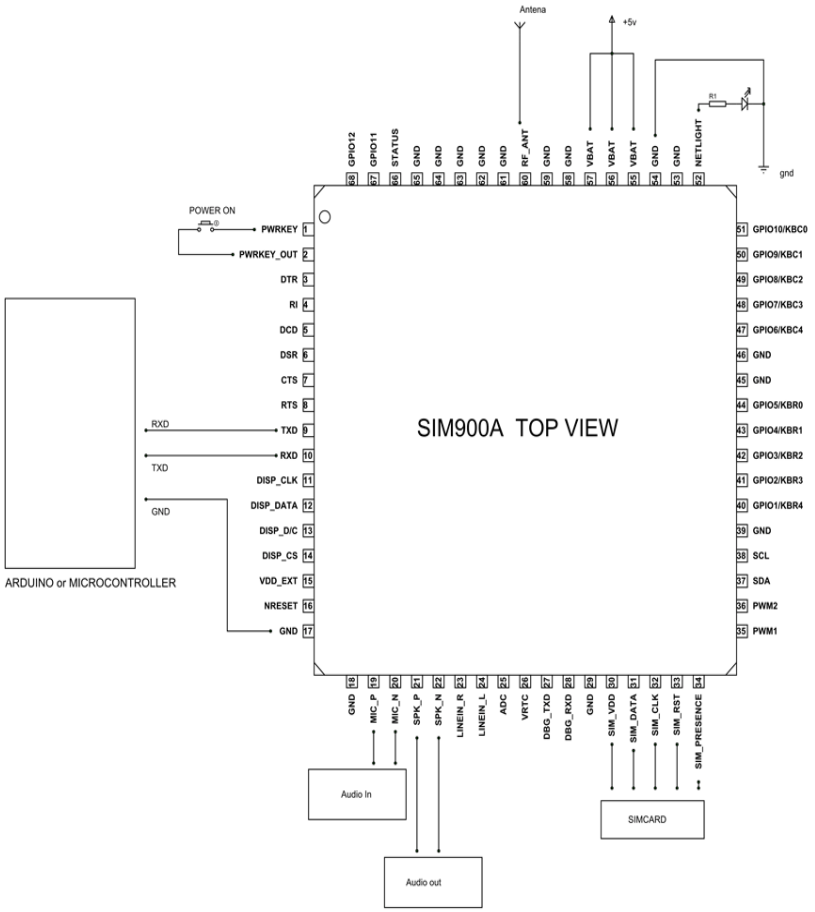


Fig no:2.3 Interfacing GSM SIM 900 with Arduino

As Shown above, the communication with this module is done through UART or RS232 Interface. The data is sent to the module or received from the module though UART interface. The module is typically connected to +4.0V standard power supply. It can work on +4.5V regulated power and any higher voltage may damage the module. And the power source should be able to deliver a peak current of 2A. The UART interface is established as shown in figure. All you need to do is connect RXD of module to TXD of Arduino and TXD is connected to RXD of ARDUINO.

The ground of controller and module must be connected for voltage reference. And at last we need to connect a working GSM SIM card to the module. On powering the module the LED will blink periodically to state successful connection.

After all connections are done, we need to write a program for the microcontroller to exchange data with module. Since data exchange sequence between controller and module is really complex we will use libraries prewritten for the module. You can download libraries for controller or module through their websites. Using these

libraries makes the communication easy. All you need to do is download these libraries and call them in programs. Once the header file is included, you can use simple commands in the program to tell the controller to send or receive data. The controller sends the data to the module through UART Interface based on protocol setup in libraries. The module sends this data to another GSM user using cellular network. If the module receives any data from the cellular network (or another GSM user) it will transmit it to controller through UART serial communication.

This way we can use GSM900A module to establish cellular connection.

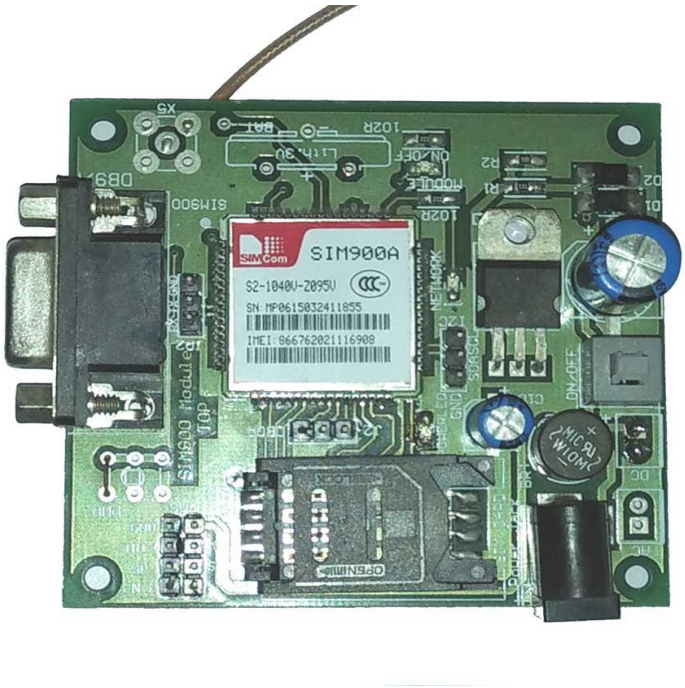


**Fig no:2.4 Real view of GSM SIM 900**

### 2.2.6 LED Status Indicators

There are three LEDs on the SIM900 GSM/GPRS shield which indicates connectivity or power status. By observing these LEDs you can get a visual feedback on what's going on with the shield.

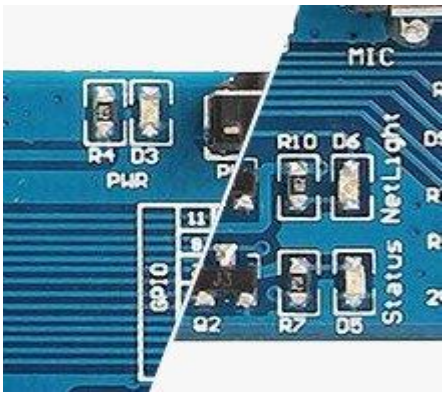


Fig no: **2.5 LED Status Indicators**

**PWR**: This LED is connected to the shield's power supply line. If this LED is on, the shield is receiving power.

**Status**: This LED indicates SIM900's working status. If this LED is on, the chip is in working mode.

**Net light**: This LED indicates the status of your cellular network. It'll blink at various rates to show what state it's in.

- off: The SIM900 chip is not running
- 64ms on, 800ms off: The SIM900 chip is running but not registered to the cellular network yet.
- 64ms on, 3 seconds off: The SIM900 chip is registered to the cellular network & can send/receive voice and SMS.
- 64ms on, 300ms off: The GPRS data connection you requested is active.

### 2.2.7 ANTENNA

- An antenna is required to use the SIM900 for any kind of voice or data communications as well as some SIM commands.

Fig No:2.6 Antenna

- The shield has two interfaces for connecting antenna viz. a U.FL connector and a SMA connector. They are connected through a patch cord.

- The shield usually comes with a 3dBi GSM antenna and allows you to put the shield inside a metal case(as long the antenna is outside).

### 2.2.8 SIM Socket

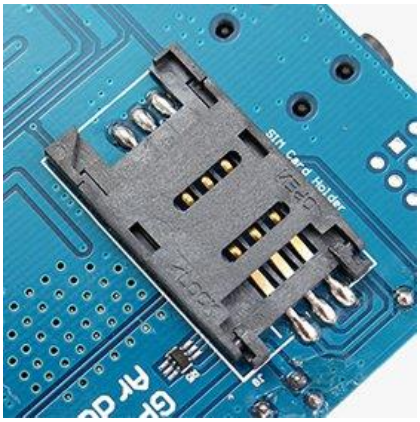


Fig no:2.7 SIM Socket

- There's a SIM socket on the back. Any activated, 2G full-size SIM card would

  Work perfectly.

- The workings of the SIM card socket can take some getting used to unlock the latch, push the top part of the assembly, and then lift it up.

- Place the SIM card into the bottom part of the socket. Then fold the arm back into the body of the socket, and gently push it forward towards the LOCK position.

### 2.2.9 Hardware Trigger

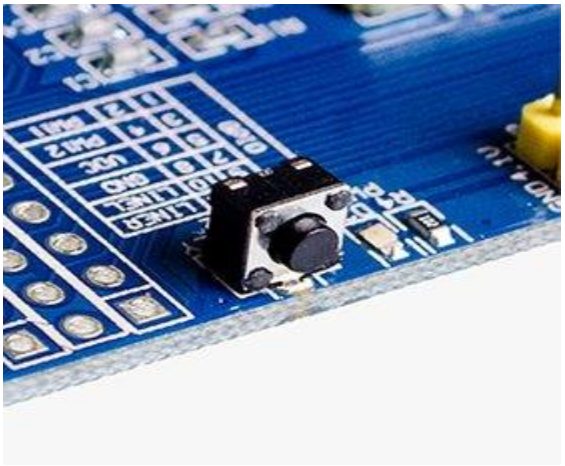

Fig no:2.8 Hardware Trigger

- The shield comes with a right angle tactile switch situated near the PWR LED indicator. You need to press that switch for about 2 seconds to power the shield up/down.

### 2.2.10 Software trigger

- Instead of manually pressing the PWRKEY every time, you can turn the SIM900 up/down programmatically.
- First, you need to solder the SMD jumper named R13 on the shield as highlighted in the image.

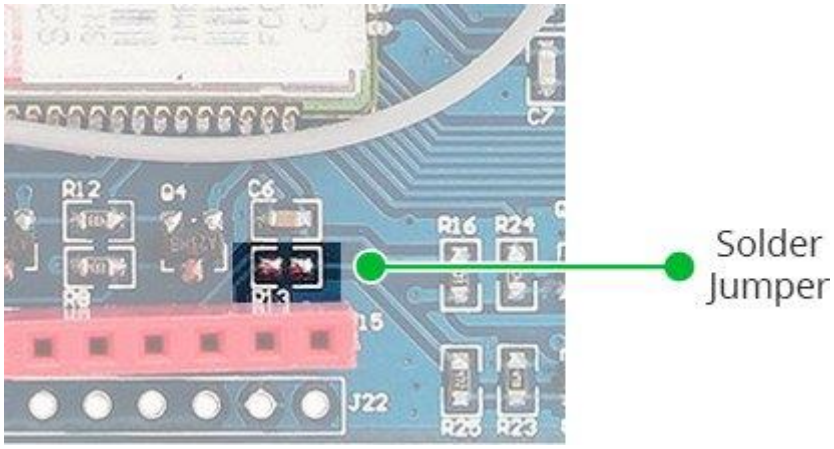


Fig no: 2.9 Software trigger

### 2.2.11 Powering Up/Down SIM900 Chip

Even if you power the shield up, you need to turn on the SIM900 chip to get it working.

As per datasheet, pulling the PWRKEY pin on the chip LOW for at least 1 second will power up/down the chip. There are two ways to do this with our shield.

### 2.2.12 Supplying Power for SIM900 Shield

One of the most important parts of getting the SIM900 shield working is supplying it with enough power.

Depending on which state it’s in, the SIM900 can be a relatively power-hungry device. The maximum current draw of the chip is around 2A during transmission burst. It usually won’t pull that much, but may require around 216mA during phone calls or 80mA during network transmissions. This chart from the datasheet summarizes what you may expect:

| Modes | Frequency | Current Consumption |
|---|---|---|
| Power down | | 60 uA |
| Sleep mode | | 1 mA |
| Stand by | | 18 mA |
| Call | GSM850 | 199 mA |
| | EGSM900 | 216 mA |
| | DCS1800 | 146 mA |
| | PCS1900 | 131 mA |
| GPRS | | 453 mA |
| Transmission burst | | 2 A |

Table no:2.3 Supplying Power for SIM900 Shield

The operating voltage of SIM900 chip is from 3.4V to 4.4V. To keep supply voltage safe at 4.1V, the shield comes with a high current, high accuracy, low-dropout voltage regulator MIC29302WU from Micrel – capable of handling load currents up to 3A.

Fig no:2.10 Supplying Power for SIM900 Shield

You can add an external power supply to the shield with the 5.5mm DC jack, to which you can connect any 5V-9V DC wall adapter you have. Next to the DC jack, is a Slide

Switch to select the power source labelled EXTERN. To use external power source, move the slider as shown above.

**Warning:**

**The power supply should be able to source minimum 2A of surge current, otherwise the chip will keep shutting down**.

## 2.3 RELAY

Triggering the relay operates the normally open or normally closed contacts. It is frequently used in an automatic control circuit. To put it simply, it is an automatic switch to control a high current circuit with a low-current signal.5V relay signal input voltage range, 0-5v.

Fig no:2.11 view of relay

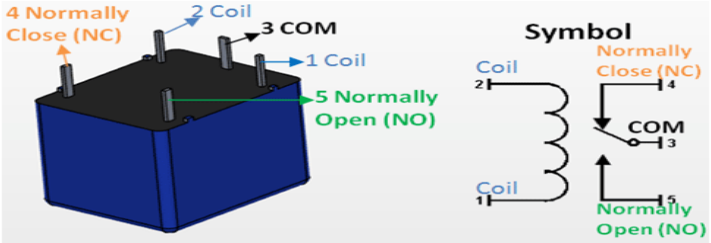


Fig no:2.12 Circuit and pin diagram of relay

### 2.3.1 Relay Pin Configuration

| Pin Number | Pin Name | Description |
|---|---|---|
| 1 | Coil End 1 | Used to trigger(On/Off) the Relay, Normally one end is connected to 5V and the other end to ground |
| 2 | Coil End 2 | Used to trigger(On/Off) the Relay, Normally one end is connected to 5V and the other end to ground |
| 3 | Common (COM) | Common is connected to one End of the Load that is to be controlled |
| 4 | Normally Close (NC) | The other end of the load is either connected to NO or NC. If connected to NC the load remains connected before trigger |
| 5 | Normally Open (NO) | The other end of the load is either connected to NO or NC. If connected to NO the load remains disconnected before trigger |

**Table No:2.4 Relay Pin Configuration**

### 2.3.2 Features of 5-Pin 5V Relay

- Trigger Voltage (Voltage across coil) : 5V DC
- Trigger Current (Nominal current) : 70mA
- Maximum AC load current: 10A @ 250/125V AC
- Maximum DC load current: 10A @ 30/28V DC
- Compact 5-pin configuration with plastic moulding
- Operating time: 10msec Release time: 5msec
- Maximum switching: 300 operating/minute (mechanically)

### 2.3.3 Equivalent Relays

- 3V relay
- 12V relay
- 1-channel Relay module
- 4-channel Relay Module.

### 2.3.4 How to use a Relay

Relays are most commonly used switching device in electronics. Let us learn how to use one in our circuits based on the requirement of our project.

Before we proceed with the circuit to drive the relay we have to consider two important parameter of the relay. Once is the **Trigger Voltage**, this is the voltage required to turn on the relay that is to change the contact from Common->NC to Common->NO. Our relay here has 5V trigger voltage, but you can also find relays of values 3V, 6V and even 12V so select one based on the available voltage in your project. The other parameter is your **Load Voltage & Current**, this is the amount of voltage or current that the NC, NO or Common terminal of the relay could withstand, in our case for DC it is maximum of 30V and 10A. Make sure the load you are using falls into this range.

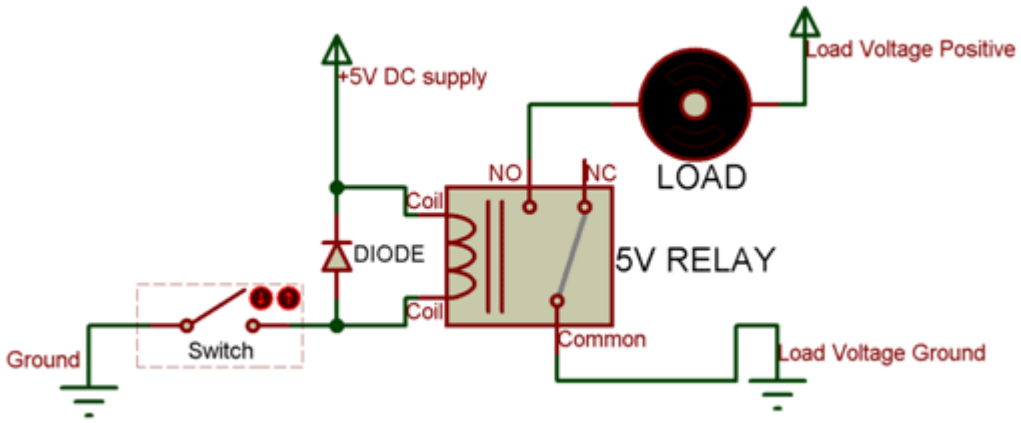


Fig no:2.13 internal Circuit diagram of relay

The above circuit shows a bare-minimum concept for a relay to operate. Since the relay has 5V trigger voltage we have used a +5V DC supply to one end of the coil and the other end to ground through a switch. This switch can be anything from a small transistor to a microcontroller or a microprocessor which can perform switching operating. You can also notice a diode connected across the coil of the relay, this diode is called the Fly back Diode. The purpose of the diode is to protect the switch from high voltage spike that can produced by the relay coil. As shown one end of the load can be connected to the Common pin and the other end is either connected to NO or NC. If connected to NO the load remains disconnected before trigger and if connected to NC the load remains connected before trigger.

### 2.3.5 Applications of Relay

- Commonly used in switching circuits.
- For Home Automation projects to switch AC loads
- To Control (On/Off) Heavy loads at a pre-determined time/condition
- Used in safety circuits to disconnect the load from supply in event of failure
- Used in Automobiles electronics for controlling indicators glass motors etc.

## 2.4 16*2 LCD DISPLAY

### 2.4.1 INTRODUCTION

We come across LCD displays everywhere around us. Computers, calculators, television sets, mobile phones, digital watches use some kind of display to display the time. An LCD is an electronic display module which uses liquid crystal to produce a visible image. The 16×2 LCD display is a very basic module commonly used in DIYs and circuits. The 16×2 translates o a display 16 characters per line in 2 such lines. In this LCD each character is displayed in a 5×7 pixel matrix.

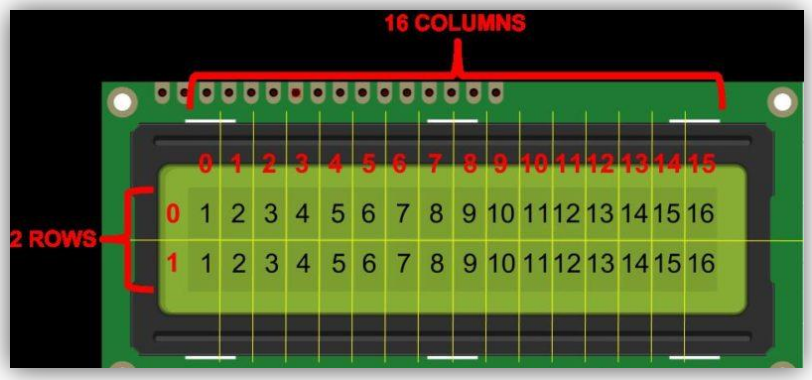


Fig no: 2.14 Display view of 16*2 LCD

### 2.4.2 Types of Registers Used In LCD:

RS (Register select):

A 16X2 LCD has two registers, namely, command and data. The register select is used to switch from one register to other. RS=0 for command register, whereas RS=1 for data register.

**Command Register**:

The command register stores the command instructions given to the LCD. A command is an instruction given to LCD to do a predefined task like initializing it, clearing its screen, setting the cursor position, controlling display etc. Processing for commands happens in the command register.

**Data Register**:

The data register stores the data to be displayed on the LCD. The data is the ASCII value of the character to be displayed on the LCD. When we send data to LCD it goes to the data register and is processed there. When RS=1, data register is selected.

### 2.4.3 Pin Diagram of 16*2 LCD display:

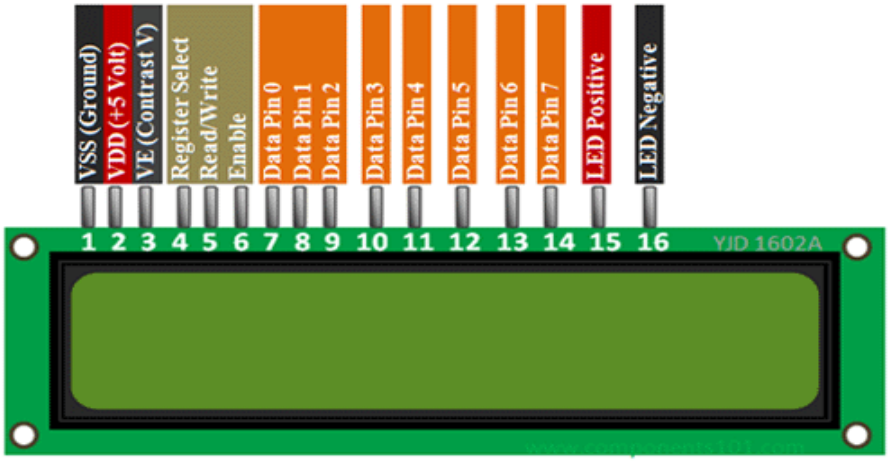


Fig no:2.15 Pin description of 16*2 LCD Display

**PIN DESCRIPTION:**

| Sr. No | Pin No. | Pin Name | Pin Type | Pin Description | Pin Connection |
|---|---|---|---|---|---|
| 1 | Pin 1 | Ground | Source Pin | This is a ground pin of LCD | Connected to the ground of the MCU/ Power source |
| 2 | Pin 2 | VCC | Source Pin | This is the supply voltage pin of LCD | Connected to the supply pin of Power source |
| 3 | Pin 3 | V0/VEE | Control Pin | Adjusts the contrast of the LCD. | Connected to a variable POT that can source 0-5V |
| 4 | Pin 4 | Register Select | Control Pin | Toggles between Command/Data Register | Connected to a MCU pin and gets either 0 or |

| | | | | | |
|---|---|---|---|---|---|
| | | | | | 1.<br>0 -> Command Mode<br>1-> Data Mode |
| 5 | Pin 5 | Read/Write | Control Pin | Toggles the LCD between Read/Write Operation | Connected to a MCU pin and gets either 0 or 1.<br>0 -> Write Operation<br>1-> Read Operation |
| 6 | Pin 6 | Enable | Control Pin | Must be held high to perform Read/Write Operation | Connected to MCU and always held high. |
| 7 | Pin 7-14 | Data Bits (0-7) | Data/Command Pin | Pins used to send Command or data to the LCD. | <u>In 4-Wire Mode</u><br>Only 4 pins (0-3) is connected to MCU<br><u>In 8-Wire Mode</u><br>All 8 pins(0-7) are connected to MCU |
| 8 | Pin 15 | LED Positive | LED Pin | Normal LED like operation to illuminate the LCD | Connected to +5V |

| | | | | | |
|---|---|---|---|---|---|
| 9 | Pin 16 | LED Negative | LED Pin | Normal LED like operation to illuminate the LCD connected with GND. | Connected to ground |

**Table No: 2.5 Pin Description Of 16*2 LCD Display**

### 2.4.4 Important command codes for LCD

| S.No | Hex Code | Command to LCD instruction Register |
|---|---|---|
| 1 | 01 | Clear display screen |
| 2 | 02 | Return home |
| 3 | 04 | Decrement cursor (shift cursor to left) |
| 4 | 06 | Increment cursor (shift cursor to right) |
| 5 | 05 | Shift display right |
| 6 | 07 | Shift display left |
| 7 | 08 | Display off, cursor off |
| 8 | 0A | Display off, cursor on |
| 9 | 0C | Display on, cursor off |
| 10 | 0E | Display on, cursor blinking |
| 11 | 0F | Display on, cursor blinking |
| 12 | 10 | Shift cursor position to left |
| 13 | 14 | Shift cursor position to right |

| | | |
|---|---|---|
| 14 | 18 | Shift the entire display to the left |
| 15 | 1C | Shift the entire display to the right |
| 16 | 80 | Force cursor to beginning ( 1st line) |
| 17 | C0 | Force cursor to beginning ( 2nd line) |
| 18 | 38 | 2 lines and 5×7 matrix |

Table No:2.6 Important Command Codes For LCD

### 2.4.5 INTERFACING 16*2 LCD with Arduino

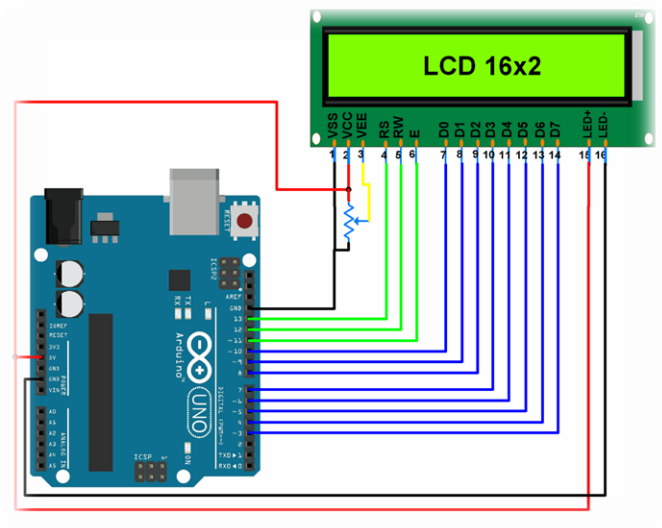


Fig no:2.16 Interfacing 16*2 LCD with Arduino

Unlike normal development boards interfacing a LCD to a ARDUINO is quite easy. Here we don't have to worry about data sending and receiving. We just have to define the pin numbers and it will be ready to display data on LCD.

In the circuit, you can observe I have only took two control pins, this gives the flexibility. The contrast bit and READ/WRITE are not often used so they can be shorted to ground. This puts LCD in highest contrast and read mode. We just need to control ENABLE and RS pins to send characters and data accordingly.

The connections which are done for LCD are given below:

PIN1 or VSS to ground

PIN2 or VDD or VCC to +5v power

PIN3 or VEE to ground (gives maximum contrast best for a beginner)

PIN4 or RS (Register Selection) to PIN0 of ARDUINO UNO

PIN5 or RW (Read/Write) to ground (puts LCD in read mode eases the communication for user)

PIN6 or E (Enable) to PIN1 of ARDUINO UNO

PIN11 or D4 to PIN8 of ARDUINO UNO

PIN12 or D5 to PIN9 of ARDUINO UNO

PIN13 or D6 to PIN10 of ARDUINO UNO

PIN14 or D7 to PIN11 of ARDUINO UNO

The ARDUINO IDE allows the user to use LCD in 4 bit mode. This type of communication enables the user to decrease the pin usage on ARDUINO, unlike other the ARDUINO need not to be programmed separately for using it in 4 it mode because by default the ARDUINO is set up to communicate in 4 bit mode. In the circuit you can see we have used 4bit communication (D4-D7).

## 2.5 Buck converter

### 2.5.1 LM2596 Introduction

The **LM2596** is known for its high current rating of 3A. It is available in many versions with fixed output voltage like 3.3V, 5V and 12V. But, the most famous one is the LM2596-ADJ which has variable output voltage. The IC is basically a buck converter that operates on 150KHz switching frequency, it takes in an input voltage and uses the internal switching circuit to regulated a desired output voltage. It has high efficiency and in-built Thermal shutdown and current limit functionalities. So if you are looking for a small high package, easy to use high current buck converter IC then LM2596 might me the right choice for you.

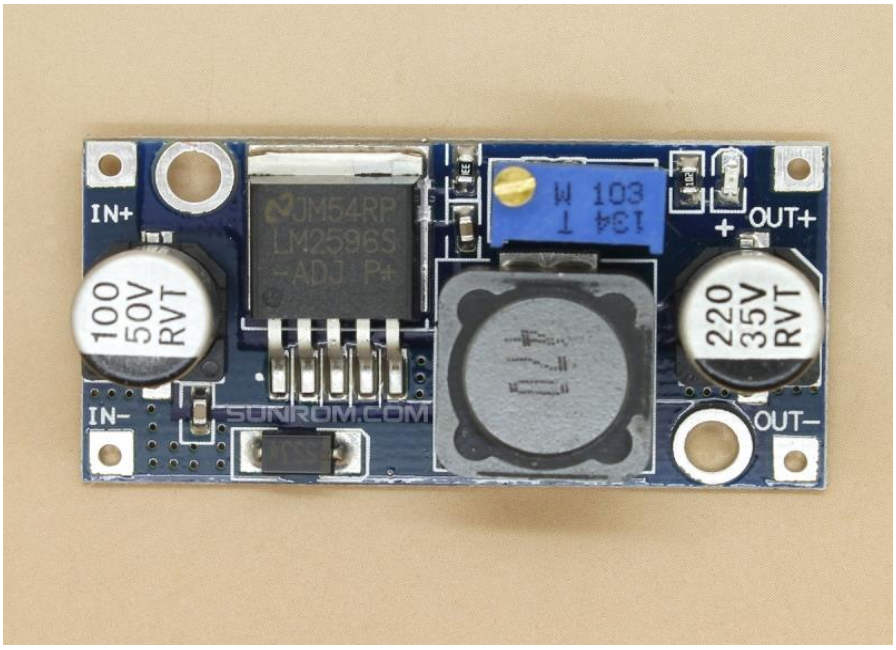


Fig no:2.17 Buck converter

This is an LM2596 DC-DC buck converter step-down power module with high-precision potentiometer for adjusting output voltage, capable of driving a load up to 3A with high efficiency. When the output current required is greater than 2.5A(10W) an external heatsink is suggested.

**What does a buck converter do?**

A **buck converter** (**step-down converter**) is a DC-to-DC power **converter** which steps down voltage (while stepping up current) from its input (supply) to its output (load).

### 2.5.2 Pin Diagram of LM2596

Fig No:2.18 Pin Diagram Of LM2596

## Pin Description:

| Pin Number | Pin Name | Description |
|---|---|---|
| 1 | V-IN | Input voltage that is to be regulated |
| 2 | V-OUT | Stepped down Regulated output Voltage |
| 3 | Ground | Connected to system ground |
| 4 | Feedback | Sets the output voltage using divider network using output voltage feedback |
| 5 | ON/OFF | Enable pin, should be grounded for normal operation |

Table no:2.7 pin description of LM2596

### 2.5.3 Package Include:

- 1 x DC-DC Buck Converter Step Down Module LM2596 Power Supply

### 2.5.4 Board Schematic:

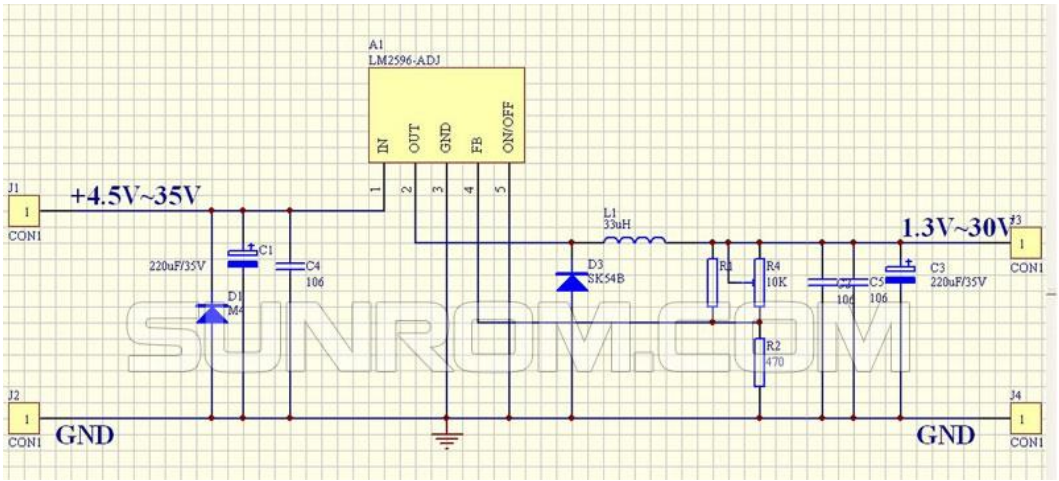


Fig no:2.19 schematic Diagram of LM2596

### 2.5.5 Features of Buck Converter LM2596

- 3A Step Down Voltage Regulator IC
- Available as 3.3V regulator, 5V Regulator, 12V Regulator and Variable regulator
- Input Supply Voltage: 4.5V to 40V
- Minimum Output Voltage: 3.16V
- Continuous Output Current: 3A
- Peak Output Current: 6.9A
- Switching Frequency: 150KHz
- Available in To-220 and To-263 Package

**Note:** The **LM2596** is of many types. The adjustable version **LM2596-ADJ** is the most commonly used and hence we will discuss only about that in this article.

### 2.5.6 Applications of LM2596:

- Used in battery circuits since they have high efficiency
- Step-down Linear regulators
- Used in small SMPS circuits
- Battery Operated Applications
- Variable Voltage generators
- Miniature RPS Circuits

### 2.5.7 How to use the LM2596 Regulator?

The LM2596 is very easy to use because it requires very minimum number of components. The unregulated voltage is given to pin 1 (Vin) across a filter capacitor to reduce input noise. The ON/OFF or enable pin (pin 5) should be connected to ground to enable the IC. If made high the IC will enter shutdown mode and prevent leakage current. This feature will be useful to save input power when operating via battery. The feedback pin is the important pin which sets the output voltage. It sense the output voltage and based on the value of this output voltage the switching frequency of the internal switch is adjusted to provide the desired output voltage. Finally the output voltage is obtained through pin 2 through an LC filter. The complete circuit diagram is given below, you can often find these circuit in the **LM2596 DC Converter module.**

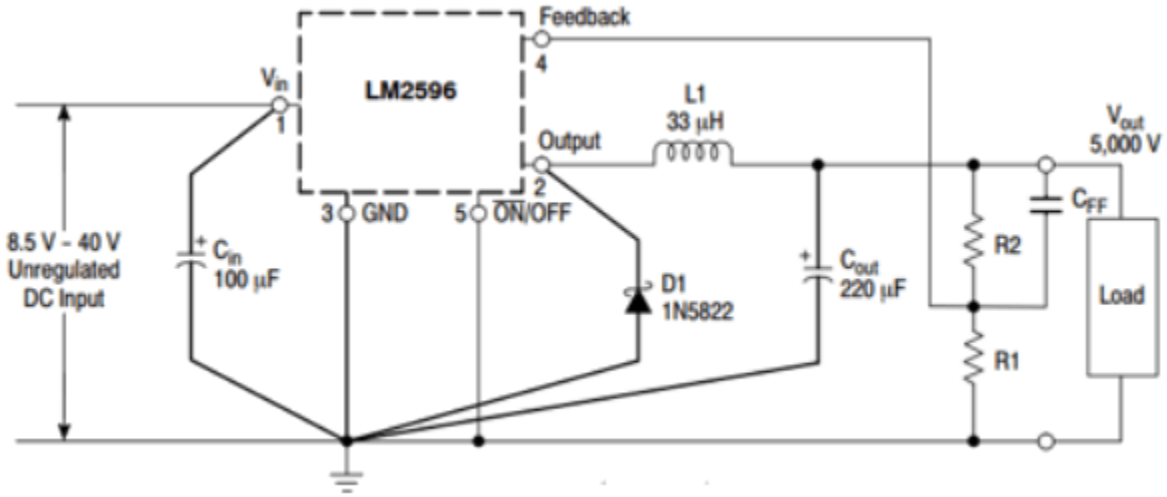


Fig no:2.20 LM2596 DC Converter module.

### 2.5.8 Calculating output voltage for LM2596

As told earlier the output voltage of the **LM2596-ADJ** can be controlled by using the feedback pin. The aboce circuit diagram shows the feedback pin getting the feedback voltage from a voltage divider circuit formed with Resistors R1 and R2. The value of this R1 and R2 decides the output voltage of the IC. The formula to calculate R1 and R2 is given below.

$V_{out} = V_{ref}(1.0 + R2/R1)$

Here the value of Vref can be considered as 1.23V hence the formula becomes **Vout = 1.23*(1+(R2/R1))**, where the value of R1 should be between 1k to 5k. It is also possible to use a variable resistor in place of R1 to control the output voltage. This makes the IC easier to use in Variable power supply circuits.

# CHAPTER-3

## WORKING

When we send SMS to GSM module by Mobile, then GSM receives that SMS and sends it to Arduino. Now Arduino reads this SMS and extract main command from the received string and stores in a variable. After this, Arduino compare this string with predefined string. If match occurred then Arduino sends signal to relay via relay driver for turning ON and OFF the appliances. And relative result also prints on 16x2 LCD by using appropriate commands.

GSM module is used in many communication devices which are based on GSM (Global System for Mobile Communications) technology. It is used to interact with GSM network using a computer. GSM module only understands AT commands, and can respond accordingly. The most basic command is “AT”, if GSM respond OK then it is working good otherwise it respond with “ERROR”.

The **SIM900** is a complete Quad-band **GSM/GPRS Module** which delivers GSM/GPRS 850/900/1800/1900MHz performance for voice, SMS and Data with low power consumption

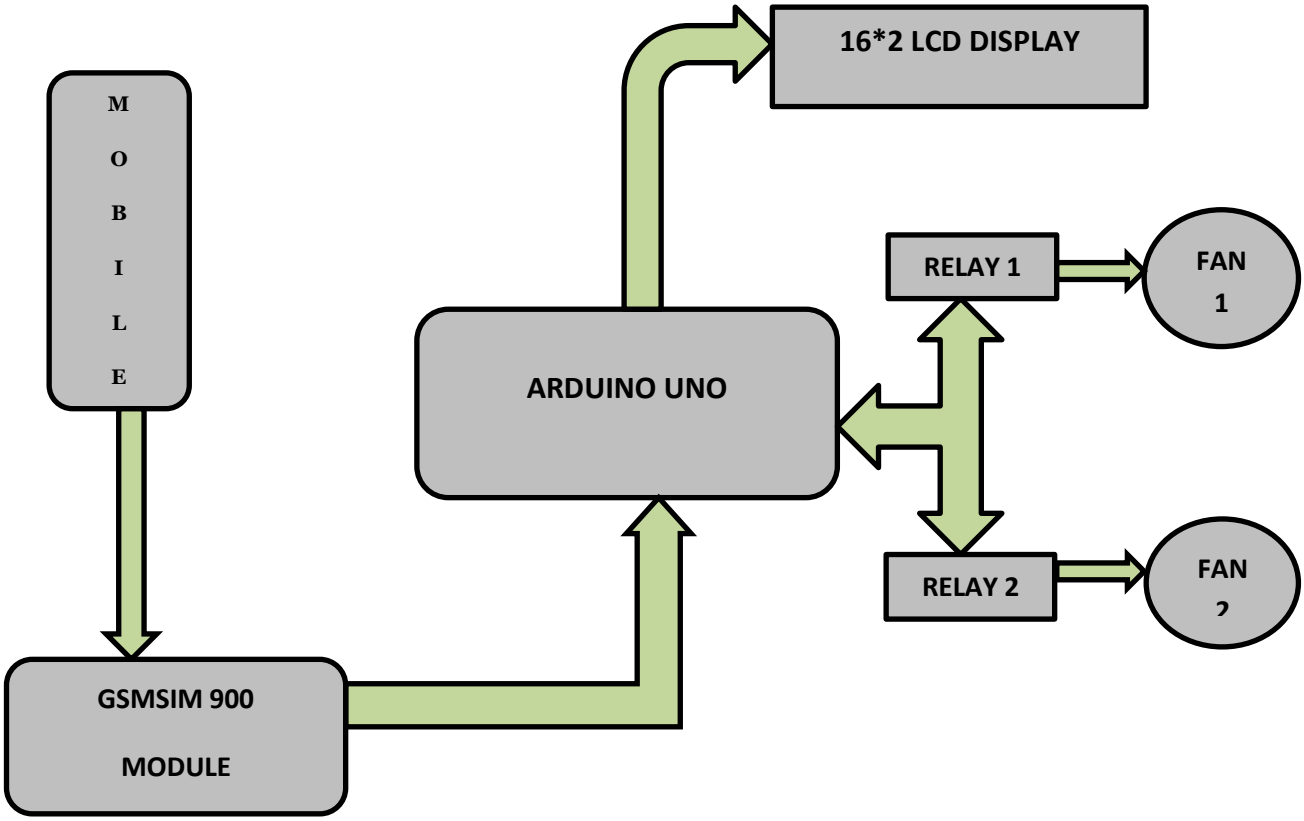


Fig 3.1 Block diagram of working of Kit

# CHAPTER -4

# PROGRAMMING

## 4.1.LCD DISPLAY

```
#include<SoftwareSerial.h>
SoftwareSerial SIM(10,11);
String incomingData;
String message="";
#include<LiquidCrystal.h>
LiquidCrystal lcd(2,3,4,5,6,7);
void setup() {
 // put your setup code here, to run once:
 SIM.begin(19200);
 Serial.begin(115200);
 lcd.begin(16,2);
 lcd.setCursor(0,0);
 lcd.print("Welcome to GSM ");
 delay(2000);
 lcd.setCursor(1,0);
 lcd.print("based Automation");
 delay(1000);
 lcd.clear();
 lcd.setCursor(0,0);
 lcd.print("GSM SEARCH.. ");
 delay(2000);
 lcd.setCursor(1,0);
 lcd.print("CONNECTED");
```

```
delay(1000);
lcd.clear();
lcd.setCursor(0,0);
lcd.print("Control devices ");
delay(2000);
lcd.setCursor(1,0);
lcd.print("From ur MBL");
delay(1000);
}
void loop()
{
// put your main code here, to run repeatedly:
if (incomingData.indexOf("L11")>=0)
{
lcd.clear();
lcd.setCursor(0,0);
lcd.print("Light1 ON");
delay(2000);
}
 else if (incomingData.indexOf("L10")>=0)
{
lcd.clear();
lcd.setCursor(0,0);
lcd.print("Light1 OFF");
delay(2000);
}
else if (incomingData.indexOf("L21")>=0)
```

```
  {
  lcd.clear();
  lcd.setCursor(0,0);
  lcd.print("Light2 ON");
  delay(2000);
  }
  else if (incomingData.indexOf("L20")>=0)
 {
 lcd.clear();
 lcd.setCursor(0,0);
 lcd.print("Light2 OFF");
delay(2000);
}
else if (incomingData.indexOf("L31")>=0)
{
lcd.clear();
lcd.setCursor(0,0);
lcd.print("Light3 ON");
delay(2000);
}
else if (incomingData.indexOf("L30")>=0)
{
lcd.clear();
lcd.setCursor(0,0);
lcd.print("Light3 OFF");
delay(2000);
}
```

```
 else if (incomingData.indexOf("L41")>=0)
{
 lcd.clear();
 lcd.setCursor(0,0);
 lcd.print("Light4 ON");
 delay(2000);
 }
 else if (incomingData.indexOf("L40")>=0)
{
 lcd.clear();
 lcd.setCursor(0,0);
 lcd.print("Light4 OFF");
 delay(2000);
 }
 else if (incomingData.indexOf("L51")>=0)
{
 lcd.clear();
 lcd.setCursor(0,0);
 lcd.print("Light5 ON");
 delay(2000);
}
else if (incomingData.indexOf("L50")>=0)
{
lcd.clear();
lcd.setCursor(0,0);
lcd.print("Light5 OFF");
```

```
delay(2000);
}
else if (incomingData.indexOf("F11")>=0)
{
 lcd.clear();
 lcd.setCursor(0,0);
 lcd.print("Fan1 ON");
 delay(2000);
 }
 else if (incomingData.indexOf("F10")>=0)
{
 lcd.clear();
 lcd.setCursor(0,0);
 lcd.print("Fan1 OFF");
 delay(2000);
 }
 else if (incomingData.indexOf("F21")>=0)
{
 lcd.clear();
 lcd.setCursor(0,0);
 lcd.print("Fan2 ON");
 delay(2000);
 }
 else if (incomingData.indexOf("F20")>=0)
{
lcd.clear();
lcd.setCursor(0,0);
```

```
lcd.print("Fan2 OFF");
delay(2000);
}
else if (incomingData.indexOf("F31")>=0)
{
lcd.clear();
lcd.setCursor(0,0);
lcd.print("Fan3 ON");
delay(2000);
}
else if (incomingData.indexOf("F30")>=0)
{
 lcd.clear();
 lcd.setCursor(0,0);
 lcd.print("Fan3 OFF");
 delay(2000);
 }
 else if (incomingData.indexOf("F41")>=0)
{
 lcd.clear();
 lcd.setCursor(0,0);
 lcd.print("Fan4 ON");
 delay(2000);
 }
 else if (incomingData.indexOf("F40")>=0)
{
lcd.clear();
```

```
lcd.setCursor(0,0);
lcd.print("Fan4 OFF");
delay(2000);
}
else if (incomingData.indexOf("F51")>=0)
{
lcd.clear();
lcd.setCursor(0,0);
lcd.print("Fan5 ON");
delay(2000);
}
else if (incomingData.indexOf("F50")>=0)
{
lcd.clear();
lcd.setCursor(0,0);
lcd.print("Fan5 OFF");
delay(2000);
}
else if (incomingData.indexOf("AllOFF")>=0)
{
lcd.clear();
lcd.setCursor(0,0);
lcd.print("All OFF");
delay(2000);
}
else if (incomingData.indexOf("AllON")>=0)
{
```

```
lcd.clear();
lcd.setCursor(0,0);
lcd.print("All ON");
delay(2000);
}
}
```

### 4.2.GSM SIM 900 PROGRAMMING

```
#include<SoftwareSerial.h>
SoftwareSerial SIM(10,11);
String incomingData;
String message="";
int relay1=2;
int relay2=3;
int relay3=4;
int relay4=5;
int relay5=6;
int relay6=7;
int relay7=8;
int relay8=9;
int relay9=10;
int relay10=11;
void setup()
 {
 // put your setup code here, to run once:
 SIM.begin(19200);
 pinMode(relay1,OUTPUT);
 pinMode(relay2,OUTPUT);
 pinMode(relay3,OUTPUT);
 pinMode(relay4,OUTPUT);
 pinMode(relay5,OUTPUT);
 pinMode(relay6,OUTPUT);
 pinMode(relay7,OUTPUT);
 pinMode(relay8,OUTPUT);
```

```
pinMode(relay9,OUTPUT);
pinMode(relay10,OUTPUT);
SIM.print("AT+CMGF=1\r");
delay(100);
SIM.print("AT+CNMI=2,2,0,0,0\r");
delay(2000);
message="Power return u can control the pannel from your mobile now";
send_message(message);
}
void loop() {
// put your main code here, to run repeatedly:
receive_message();
if (incomingData.indexOf("L11")>=0){
digitalWrite(relay1,HIGH);
message="Light1 turned on";
send_message(message);
delay(1000);
}
else if (incomingData.indexOf("L10")>=0)
{
digitalWrite(relay1,LOW);
message="Light1 turned off";
send_message(message);
delay(1000);
}
else if (incomingData.indexOf("L21")>=0)
{
```

```
 digitalWrite(relay2,HIGH);
 message="Light2 turned on";
 send_message(message);
 delay(1000);
 }
 else if (incomingData.indexOf("L20")>=0)
{
 digitalWrite(relay2,LOW);
 message="Light2 turned off";
 send_message(message);
 delay(1000);
 }
 else if (incomingData.indexOf("L31")>=0)
{
 digitalWrite(relay3,HIGH);
 message="Light3 turned on";
 send_message(message);
 delay(1000);
 }
 else if (incomingData.indexOf("L30")>=0)
{
digitalWrite(relay3,LOW);
message="Light3 turned off";
send_message(message);
delay(1000);
}
```

```
 else if (incomingData.indexOf("L41")>=0)
{
 digitalWrite(relay4,HIGH);
 message="Light4 turned on";
 send_message(message);
 delay(1000);
 }
 else if (incomingData.indexOf("L40")>=0)
{
 digitalWrite(relay4,LOW);
 message="Light4 turned off";
 send_message(message);
 delay(1000);
 }
 else if (incomingData.indexOf("L51")>=0)
{
 digitalWrite(relay5,HIGH);
 message="Light5 turned on";
 send_message(message);
 delay(1000);
 }
 else if (incomingData.indexOf("L50")>=0)
{
digitalWrite(relay5,LOW);
message="Light5 turned off";
send_message(message);
delay(1000);
```

```
}
else if (incomingData.indexOf("F11")>=0)
{
 digitalWrite(relay6,HIGH);
  message="Fan1 turned on";
  send_message(message);
  delay(1000);
  }
  else if (incomingData.indexOf("F10")>=0)
 {
 digitalWrite(relay6,LOW);
 message="Fan1 turned off";
 send_message(message);
 delay(1000);
 }
 else if (incomingData.indexOf("F21")>=0)
{
 digitalWrite(relay7,HIGH);
 message="Fan2 turned on";
 send_message(message);
 delay(1000);
 }
 else if (incomingData.indexOf("F20")>=0)
{
 digitalWrite(relay7,LOW);
 message="Fan2 turned off";
 send_message(message);
```

```
 delay(1000);
 }
 else if (incomingData.indexOf("F31")>=0){
 digitalWrite(relay8,HIGH);
 message="Fan3 turned on";
 send_message(message);
 delay(1000);
 }
 else if (incomingData.indexOf("F30")>=0)
{
 digitalWrite(relay8,LOW);
 message="Fan3 turned off";
 send_message(message);
 delay(1000);
 }
 else if (incomingData.indexOf("F41")>=0)
{
 digitalWrite(relay9,HIGH);
 message="Fan4 turned on";
 send_message(message);
 delay(1000);
 }
 else if (incomingData.indexOf("F40")>=0)
{
digitalWrite(relay9,LOW);
message="Fan4 turned off";
send_message(message);
```

```
delay(1000);
}
else if (incomingData.indexOf("F51")>=0)
{
digitalWrite(relay10,HIGH);
message="Fan5 turned on";
send_message(message);
delay(1000);
}
else if (incomingData.indexOf("F50")>=0)
{
digitalWrite(relay10,LOW);
message="Fan5 turned off";
send_message(message);
delay(1000);
}
else if (incomingData.indexOf("AllOFF")>=0)
{
 digitalWrite(relay1,LOW);
 digitalWrite(relay2,LOW);
 digitalWrite(relay3,LOW);
 digitalWrite(relay4,LOW);
 digitalWrite(relay5,LOW);
 digitalWrite(relay6,LOW);
 digitalWrite(relay7,LOW);
 digitalWrite(relay8,LOW);
  digitalWrite(relay9,LOW);
```

```
digitalWrite(relay10,LOW);
message="ALL turned on";
send_message(message);
delay(1000);
}
else if (incomingData.indexOf("AllON")>=0){
digitalWrite(relay1,HIGH);
digitalWrite(relay2,HIGH);
digitalWrite(relay3,HIGH);
digitalWrite(relay4,HIGH);
digitalWrite(relay5,HIGH);
digitalWrite(relay6,HIGH);
digitalWrite(relay7,HIGH);
digitalWrite(relay8,HIGH);
digitalWrite(relay9,HIGH);
digitalWrite(relay10,HIGH);
message="ALL turned off";
send_message(message);
delay(1000);
}
}
void receive_message()
{
if (SIM.available() > 0)
{
incomingData = SIM.readString();
Serial.print(incomingData);
```

```
  delay(10);
  }
  }
 void send_message(String message)
 {
 SIM.println("AT+CMGF=1");
delay(100);
SIM.println("AT+CMGS=\"9000926931\""); // enter your mobile number
delay(100);
SIM.println(message);
delay(100);
SIM.println((char)26);
delay(100);
SIM.println();
delay(1000);
}
```

# CHAPTER-5

# CONCLUSION

It can be concluded that AUTOMATION SYSTEM USING ARDUINO was a success. This system consists of an Arduino-Uno board, a GSM Module, a GSM based phone, power sockets and appliances. It is user friendly and it is cost effective. Also it can be concluded that the objectives of this project has been successfully met and they are as follows:

- Constructed a wireless automation system controlled by a GSM based phone.

- Designed and implemented cost effective home automation system yet an efficient one.

- Designed a user friendly and a safe system to control home appliances especially aimed to aid the elders and handicapped.

The communication development and the increase of living standard of people are directly related to the more use of cellular mobile. Cellular mobile radio-the high end sophisticated technology that enables everyone to communicate anywhere with anybody. The mobile telephony industry rapidly growing and that has become backbone for business success and efficiency and a part of modern lifestyles all over the world.

The features and benefits expected in the GSM systems are superior speech quality, low terminal, operational and service costs, a high level security, providing international roaming support of low power hand portable terminals and variety of new services and network facilities. In near forth coming days, the third generation mobile telephony becomes available whole over the world, which will give the facility of videoconference in mobile telephone.