Selective Harmonic Elimination and THD Minimization in Cascaded H-Bridge Multi-Level Inverters using Evolutionary Computational Techniques

THESIS

Submitted in partial fulfilment of the requirements for the award of the degree of

MASTER OF TECHNOLOGY

IN

POWER ELECTRONICS AND DRIVES

By

MATTAPARTHI LAKSHMI SRAVANTHI

[Reg. No. 20021D5211]

Under the esteemed guidance of

Dr. K. Ravindra

Professor & Head of the Department

Department of Electrical & Electronics Engineering

DEPARTMENT OF ELECTRICAL & ELECTRONICS ENGINEERING

UNIVERSITY COLLEGE OF ENGINEERING KAKINADA (A)

JAWAHARLAL NEHRU TECHNOLOGICAL UNIVERSITY KAKINADA

2020-2022

DEPARTMENT OF ELECTRICAL & ELECTRONICS ENGINEERING

UNIVERSITY COLLEGE OF ENGINEERING KAKINADA(A)

JAWAHARLAL NEHRU TECHNOLOGICAL UNIVERSITY KAKINADA

CERTIFICATE

This is to certify that this thesis, entitled *"***SELECTIVE HARMONICELIMINATION AND THD MINIMIZATION IN CASCADED H-BRIDGE MULTI-LEVEL INVERTERS USING EVOLUTIONARY COMPUTATIONAL TECHNIQUES***"* is being submitted by **Ms. MATTAPARTHI LAKSHMI SRAVANTHI** bearing **Roll no: 20021D5211** in partial fulfilment of the requirements for the award of degree of **Master of Technology** in **"POWER ELECTRONICS AND DRIVES"** from the Department of Electrical & Electronics Engineering to the University College of Engineering, Jawaharlal Nehru Technological University Kakinada is a record of bonafide work carried out by his/her under the guidance and supervision. The work is original and has not been submitted to any other University or Institutefor the award of any degree or diploma.

Project Guide	**Head of the Department**
Dr. K. Ravindra	Dr. K. Ravindra
Professor	Professor

DEPARTMENT OF ELECTRICAL & ELECTRONICS ENGINEERING

UNIVERSITY COLLEGE OF ENGINEERING KAKINADA (A)

JAWAHARLAL NEHRU TECHNOLOGICAL UNIVERSITY KAKINADA

2020-2022

ACKNOWLEDGEMENT

I would like to take this opportunity to express my deepest gratitude to my project supervisor, **Dr. K. RAVINDRA**, Professor & Head of the Department, Electrical and Electronics Engineering, who has persistently and determinedly guided me during the whole course of this project. He supported me well to complete this project work, he was very patience and try to explain everything even in hard situations. It would have been very difficult to complete this project without his enthusiastic support, insight, and advice.

I take immense pleasure in thanking **Dr. M.H.M Krishna Prasad**, Principal, University College of Engineering, Kakinada, JNTUK for having permitted me to carry out this project work.

I take immense pleasure in thanking **Dr. U. V. Ratna Kumari**, Vice- Principal, University College of Engineering, Kakinada, JNTUK for having permitted me to carry outthis project work.

My utmost thanks to all the **FACULTY MEMBERS** and **NON-TEACHING STAFF** of the Department of Electrical &Electronics Engineering for their support throughout my project work.

With Gratitude

MATTAPARTHI LAKSHMI SRAVANTHI

20021D5211

ABSTRACT

Power electronics converters are widely used in modern applications as there is tremendous growth in the recent era and are almost used in every possible application. The advantage of using power electronic devices is they are highly reliable and less maintenance as there are no mechanical moving parts, and are robust in structure. They are highly efficient due to fewer switching losses and have a faster dynamic response.

The DC to AC converters is usually known as inverters. The main feature of DC-to-AC converters is they are used to change the dc input voltage to a fixed or variable output voltage at a variable or fixed frequency. The output obtained by the ideal inverter is sinusoidal, but in practical applications, it is non-sinusoidal because of the presence of harmonics. Considering low and medium-power applications the voltage waveforms such as Square and Quasi-square waves may be acceptable to a certain extent, but for high-power applications, we require less distorted sine waves. To have a sinusoidal waveform with fewer distortions the aim is to reduce the harmonic content in the output. Therefore, to have an accurate and reliable operation of DC-AC converters the output should be free from harmonics. This has motivated me to carry out this research work on the design, analysis, and control of DC-AC converters. This project moves around the three important aspects of the DC-AC converters namely maintaining the fundamental component, selective harmonic elimination, and THD minimization as they are helpful to have a sinusoidal waveform in the desired output.

For the SHE technique, we can target particular lower-order harmonics and can make it eliminated but the disadvantage of this technique is that we can target only selected harmonics and have no control over the other dominant harmonics. To overcome the drawback THD minimization is adopted by which we can have a wide range of control over other harmonics. By combining these two techniques we can eliminate particular harmonics as well as minimize the percentage of other harmonics also.

In the final part, the performance of the Cascaded H bridge multi-level inverter is considered, to observe the improvement in the output voltage waveform by combining the features of both techniques. Different algorithms are proposed. Extensive experimental and simulation studies are carried out for the Cascaded H-Bridge converter. The analysis of these control techniques is presented.

CONTENTS

ABSTRACT **i**
CONTENTS **ii**
LIST OF FIGURES **v**
LIST OF TABLES **vii**
NOMENCLATURE **viii**

Chapter 1

INTRODUCTION **1**

1.1. Overview 1
1.2. Introduction to DC-AC Converters 1
1.3. Literature Survey 2
1.4. Objectives of the work 3
1.5. Project Organization 4

Chapter 2

MULTI-LEVEL INVERTERS **5**

2.1. Introduction 5
2.2. Two-Level Inverters 5
2.3. Multi-Level Inverters 6
2.4. Cascaded H-Bridge Multilevel Inverter 7
2.5. Operation of CHB -MLI 8
2.6. Advantages of CHB-MLI 10
2.7. Disadvantages of CHB-MLI 11
2.8. Conclusion 11

Chapter 3

SELECTIVE HARMONIC ELIMINATION AND THD MINIMIZATION **12**

3.1. Introduction 12
3.2. Importance of Fourier Series 12
3.3. Selective Harmonic Elimination 14
3.2.1 Objective Function for SHE Technique 15
3.2.2 Limitation of SHE-PWM Technique 15
3.3 Introduction to Modulation Index 15
3.4. Total Harmonic Distortion Minimization Technique 17
3.4.1 Voltage ripple NMS Equation 18

3.5. THD minimization applying on phase voltage 20

3.5.1. Objective function of THD minimization in terms of NMS 22

3.5.2. Objective function of THD minimization on phase voltage 23

3.6. Calculating V_{dc} based on Load requirement 23

Chapter 4
EVOLUTIONARY ALGORITHMS **24**

4.1. Introduction 24

4.2. Steps involved in an optimization problem 24

4.2.1. Defining Objective Function 24

4.3 Drawbacks of conventional/traditional optimization methods 25

4.4 Evolutionary Algorithms 26

4.5. Particle Swarm Optimization Algorithm 26

4.5.1. Implementing Particle Swarm Optimization Algorithm 26

4.5.2. Flowchart of PSO Algorithm 28

4.6. Artificial Bee Colony Optimization Algorithm 28

4.6.1. Implementing Artificial Bee Colony Optimization Algorithm 29

4.6.2. Flowchart of ABC Algorithm 31

4.7. Differential Evolution Optimization Algorithm 32

4.7.1. Implementing Differential Evolution Optimization Algorithm 32

4.7.2. Flowchart of DE Algorithm 34

4.8. Applications of EC Techniques 35

4.8.1 Optimized results for seven level CHB-MLI 35

4.9. Optimized switching angles for THD minimization only 35

4.9.1 Conclusion for minimum THD for seven level CHB-MLI 37

4.10. Optimized switching angles for THD minimization with 3rd harmonic elimination for seven level CHB-MLI 39

4.11. Optimized Switching angles for selective harmonic elimination for 3rd and 5th harmonics. 40

4.12. The cumulative Distribution Function (CDF) 41

Chapter 5
MATLAB/SIMULINK IMPLEMENTATION **43**

5.1. Simulation of Seven level CHB-MLI 43
5.2. Simulation results of Seven level CHB-MLI 47
5.3. Implementation of Seven level CHB -MLI with WAVECT Controller 48
5.4. Results of Seven level CHB-MLI on WAVECT Controller 52
5.5. Implementation of seven level CHB with WT1800E High-Performance Power Analyzer 54
5.6. Results of Seven level CHB-MLI on Power Analyzer 55

Chapter 6
CONCLUSION **58**
References **59**
Appendix **61**
A. CDF CODE FOR PERFORMANCE ANALYSIS OF ALGORITHMS 61
B. PSO CODE FOR OPTIMIZATION 61
C. ABC CODE FOR OPTIMIZATION 70
D. DE CODE FOR OPTIMIZATION 73

LIST OF FIGURES

Fig. 2.1:	Circuit Diagram of a two-level inverter	5
Fig. 2.2:	2-Level Inverter Output Waveform Comparing withSinusoidal	5
Fig. 2.3:	Classification of Multi-level inverters	6
Fig. 2.4:	Cascaded Multi-level Inverter	8
Fig. 2.5:	a) Seven level CHB MLI Inverter Topology b) Seven level CHB Inverter waveform	9
Fig. 3.1:	Odd quarter wave symmetry of seven-level cascaded H-Bridge	13
Fig. 3.2:	Waveform for three switching angles	16
Fig. 4.1:	Flowchart of PSO	28
Fig. 4.2:	Flowchart of ABC	31
Fig. 4.3:	Flowchart of DE	34
Fig. 4.4:	Plot indicating minimum THD for seven-level CHB MLI	38
Fig. 4.5:	Plot indicating switching angles vs modulation index for seven level CHB MLI	38
Fig.4.6:	CDF curve of DE algorithm	42
Fig. 5.1.	SIMULINK main mode; of seven level CHB MLI connected with RL load	43
Fig. 5.2:	Three H-bridges cascaded to form a seven level CHB MLI	44
Fig. 5.3:	PWM pulse generation logic for seven level CHB MLI	44
Fig. 5.4:	Output pole voltage of three phase seven level CHB MLI	45
Fig. 5.5:	Output line voltage of three phase seven level CHB MLI	45
Fig. 5.6:	Output current of seven level CHB MLI for R-Phase	45
Fig. 5.7:	Output pole voltage of seven level CHB MLI at MI =0.57	47

Fig. 5.8:	Output pole voltage of seven level CHB MLI at MI =0.8	47
Fig. 5.9:	WAVECT controller	48
Fig. 5.10:	Experimental setup for seven level CHB MLI on WAVECT controller	49
Fig. 5.11:	WAVECT bin model for Seven level CHB to get the PWM pulses	49
Fig. 5.12:	Pulses subsystem for generating the PWM pulses	50
Fig. 5.13:	Output pole voltage of seven level CHB MLI at MI =0.57 with WAVECT controller	52
Fig. 5.14:	Output pole voltage of seven level CHB MLI at MI =0.8 with WAVECT controller	52
Fig. 5.15:	Output Current waveform of Seven level CHB MLI at MI = 0.57 with WAVECT controller	53
Fig. 5.16:	Output Current waveform of Seven level CHB MLI at MI = 0.8 with WAVECT controller	53
Fig. 5.17:	Power Analyzer	54
Fig. 5.18:	Output Pole Voltage of Seven level CHB MLI at MI = 0.57 in power analyzer	55
Fig. 5.19:	Output Pole Voltage of Seven level CHB MLI at MI = 0.8 in power analyzer	56
Fig. 5.20:	Output Current waveform of Seven level CHB MLI in power analyzer	56
Fig. 5.21:	Comparison of voltage THD for a seven-level single-phase CHB MLI for minimal THD, pure SHE, and simultaneous SHE and THD minimization	57

LIST OF TABLES

Table. 2.1:	Switching sequence of seven-level cascaded H-Bridge Inverter	9
Table. 2.2:	Comparison of multilevel inverters in different aspects	10
Table. 4.1:	Optimization specifications of PSO algorithm	27
Table. 4.2:	Optimization specifications of ABC algorithm	31
Table. 4.3:	Optimization specifications of DE algorithm	33
Table. 4.4:	Optimized switching angles for a Seven-level CHB MLI for SHE and THD minimization.	35
Table. 4.5:	Switching angles obtained for THD minimization only	36
Table. 4.6:	Switching angles obtained for minimum THD for Seven level CHB-MLI	38
Table. 4.7:	Switching angles obtained for THD minimization with 3rd Harmonic elimination	39
Table. 4.8:	Switching angles obtained for 3rd Harmonic and 5th Harmonic elimination	40
Table. 4.9:	Global minimum obtained by DE for various Modulation Indices	41
Table. 4.10:	Computational Time of DE, ABC and PSO algorithms	42
Table.5.1:	Results of 7-level CHB MLI at Modulation Index = 0.57	46
Table.5.2:	Results of 7-level CHB MLI at Modulation Index = 0.8	46
Table.5.3:	Results of 7-level CHB MLI at Modulation Index = 0.57 with WAVECT	51
Table.5.4:	Results of 7-level CHB MLI at Modulation Index = 0.8 with WAVECT	51
Table.5.5:	Results of 7-level CHB MLI at Modulation Index = 0.57 with Power Analyzer	54
Table.5.6:	Results of 7-level CHB MLI at Modulation Index = 0.8 with Power Analyzer	55
Table.5.7:	Simultaneous SHE and minimal THD problem for a seven-level three-angle inverter	57

NOMENCLATURE

DC	**=**	**Direct Current**
AC	**=**	**Alternating Current**
MI	**=**	**Modulation Index**
CDF	**=**	**Cumulative Distribution Function**
FF	**=**	**Fitness Function**
MLI	**=**	**Multi-Level Inverter**
VSI	**=**	**Voltage Source Inverter**
HB	**=**	**H-Bridge**
DCMLI	**=**	**Diode Clamped Multi-Level Inverter**
NPCMLI	**=**	**Neutral Point Clamped Multi-Level Inverter**
FCMLI	**=**	**Flying Capacitor Multi-Level Inverter**
CHB	**=**	**Cascaded H-Bridge**
MI	**=**	**Modulation Index**
EC	**=**	**Evolutionary Computation**
SHE	**=**	**Selective Harmonic Elimination**
CM	**=**	**Common Mode**
LB	**=**	**Lower Bound**
UB	**=**	**Upper Bound**
PWM	**=**	**Pulse Width Modulation**
PAM	**=**	**Pulse Amplitude Modulation**
PSO	**=**	**Particle Swarm Optimization**
ABC	**=**	**Artificial Bee Colony**
DE	**=**	**Differential Evolution**
IGBT	**=**	**Insulated Gate Bipolar Transistor**
THD	**=**	**Total Harmonic Distortion**
NMS	**=**	**Normalized Mean Square**
RMS	**=**	**Root Mean Square**
FPGA	**=**	**Field Programmable Gate Array**

CHAPTER 1:
INTRODUCTION

1.1 Overview:

In the modern world, electric power has become a necessity for domestic appliances as well as industrial applications. There are various applications, which require electric power in different forms like AC (Alternative current) or DC (direct current), constant or variable voltage, fixed or variable frequency, etc. Generally, at the consumer end, the electrical power is supplied in AC form with fixed voltage magnitude and fixed frequency (50 or 60 Hz). Therefore, to meet the demands of different consumers, various types of power electronic converters have been developed. They convert one form of electrical power into another required form. Broadly, power electronic converters can be classified into four types.

1. AC-DC converters: These power electronic circuits convert AC voltage into a fixed or variable DC voltage. For example, diode rectifiers convert AC voltage into fixed DC voltage, whereas phase-controlled rectifiers convert AC voltage into variable DC voltage.
2. DC-AC converters: They are also known as inverters. The input voltage to this converter is DC, which is converted into AC voltage of desired magnitude and frequency by varying the conduction period of the switches.
3. AC-AC converters: They convert fixed frequency and fixed magnitude AC voltage into variable magnitude AC voltage with the same or variable frequency. For example, AC voltage regulators convert fixed AC voltage into variable AC voltage with the same frequency, whereas cyclo converters give variable AC output voltage with variable frequency.
4. DC-DC converters: These converters transform the electrical power of fixed DC voltage into variable DC voltage by controlling the conduction time of the switching devices.

In this project, the research work related to DC-AC converters has been carried out and discussed in the subsequent sections and chapters.

1.2 Introduction to DC-AC Converters:

Modern electronic systems require high-quality, compact, lightweight, reliable, and efficient power supplies. Inverters are largely used in Uninterruptible power supplies, Electric motor speed control, Power grid, Solar, Induction heating, HVDC power transmission, Electric shock Weapons, etc. The input dc sources may be batteries, fuel cells, solar cells, or other dc sources. These inverters are majorly classified into two types single-phase inverters and three-phase inverters. These inverters generally use a PWM control strategy for providing

a desired ac output voltage.

Among all the inverters two-level inverters are voltage source inverter that produces an output voltage of 0 or $+V_{dc}$ or $-V_{dc.}$ To have a quality output voltage or current waveform with less ripple content they need to operate at high switching frequencies with different PWM techniques. The limitation of this two-level inverter is that when they are operated for high power and high voltage application with high frequency there will be higher switching losses and restrictions to device rating.

In the literature, there are several classifications of DC-AC converter topologies based on different criteria. However, the important DC-AC converters can be classified as follows:

1. Diode-Clamped multilevel inverter (DCMLI)
2. Flying-capacitor multilevel inverter (FCMLI)
3. Cascaded H-Bridge multilevel inverter (CHB-MLI)

1.3 Literature Survey

Several thesis and publications are referred to understand the concepts related to multilevel inverter structure associated PWM techniques and meta heuristic algorithms.

Many multi-level inverter topologies have been proposed during last two decades. In [1, 2] different Multilevel inverter topologies like diode-clamped inverter (neutral-point clamped), capacitor-clamped (flying capacitor), and cascaded multicell with separate DC sources in the area of high-power medium-voltage energy control are discussed. Emerging topologies like asymmetric hybrid cells and soft-switched multilevel inverters are also discussed.

M. Malinowski et al., [2] presented a paper on survey of different topologies, control strategies and modulation techniques used by these inverters. Applications where the mentioned features play a key role are shown. Finally, future developments are addressed.

Mudasir Ahmed Memon [3] suggested selective harmonic elimination pulse width modulation technique for seven level cascaded multi-level with hybrid asynchronous PSO-Newton-Raphson algorithm and compared with genetic algorithm, bee algorithm and particle swarm optimization and concluded that APSO-NR minimized the fitness function value lower than 48% of modulation index range from CDF plot.

The selective harmonic elimination pulse width modulation (SHE-PWM) technique [4] is used for the elimination of selected dominant low order harmonics in the multi-level inverter output voltage. The presence of these harmonics is the essential drawback of such kind of inverters; especially when it is used for the control of different AC drivers. The SHE-PWM is based on the minimization of a constrained objective function whose variables are the switching angles used for multi-level inverter control. The solution of this optimization problem can be achieved using different metaheuristic optimization algorithms [6]. An approach of SHE-PWM based on Particle Swarm Optimization (PSO) algorithm [7] is proposed by the A. L. Kouzou, A. Krama in 2020.[5]

In 1997, Michalewicz and M. Michalewicz discusses the main paradigms of evolutionary computation techniques [8] [6] (genetic algorithms, evolution strategies, evolutionary programming, genetic programming) as well as other methods, which are hard to classify. It addresses an important query "why we require evolutionary computation technique?" and later discussed some applications of these techniques.

Javad Olamaei & Masoumeh karimi [18] explains the minimization of Total Harmonic Distortion (THD) for phase voltage of multilevel inverter. TLBO is used to solve the problem. The drawback is that harmonic percentage of individual harmonics are reduced, but the dominant lower order harmonics are not eliminated.

1.4 Objectives of the work:

The aim of this project is to control a single-phase seven level cascaded multilevel inverter using selective harmonic elimination pulse-width modulation (SHE-PWM) and total harmonic distortion minimization (THD). Optimal switching angles are obtained using meta-heuristic algorithms as the equations involved are non-linear in nature. Particle swarm optimization, Artificial Bee Colony optimization and Differential Evolution are used to obtain three optimal switching angles of SHE-PWM and THD minimization for seven level CHB to eliminate lower order harmonics and minimize the other harmonics. Hardware implementation of SHE-PWM and THD minimization for a seven level CHB inverter is done to verify the simulation results. Gating signals are generated by using the WAVECT controller.

To fulfill the objectives following task are taken up:

1. Understanding the operating principle of multi- level inverters.

2. Understanding PWM techniques.
3. Evaluate the performance of different meta-heuristic algorithms in finding optimal switching angles pertaining to SHE-PWM for 7 level CHB.
4. Generation of gating signals for SHE-PWM through MATLAB for wide range of modulation index which is useful for driving industrial loads.
5. Generation of gating signals for THD minimization through MATLAB to increase the power quality of the load.
6. SHE-PWM and THD minimization techniques on 7 level CHB are implemented experimentally using the WACECT controller.

1.5 Project Organization:

The whole project is framed into some chapters and is organized as modules. The brief description of each chapter is as follows:

Chapter 1: In this chapter overview of power electronics converters, a basic introduction and types of DC-AC converters, applications of DC-AC converters, and the main objectives of the project are seen briefly.

Chapter 2: In this chapter, the working of the Cascaded H bridge inverter, and the simulation of this inverter are studied.

Chapter 3: In this chapter Selective Harmonic Elimination and THD minimization techniques for cascaded H bridge inverter is discussed.

Chapter 4: In this chapter introduction to evolutionary computational techniques (particle swarm optimization, ABC algorithm, and differential evolution) are discussed which are used for finding the optimal switching angles for cascaded H-Bridge inverter.

Chapter 5: In this chapter, experimental results for the cascaded H bridge operations with the implementation of SHE and THD are studied.

Chapter 6: In this chapter conclusion and future scope of work are presented.

CHAPTER 2:
MULTILEVEL INVERTER

2.1Introduction:

Power electronic inverters have been used in various applications recently. Inverters have become a necessary for many implementations in industrial areas. Inverters are classified based on the voltage levels of the output voltage waveforms. Two-level inverter and Multilevel inverters.

2.2 Two -level Inverter:

Two-level inverter consists of four switches. To produce voltage at the output only one switch is turned ON out of two switches from the leg. When switches T1 and T2 are turned on the input voltage V_{DC} appears across the load and the switches T3 and T4 are turned on the voltage across the output is reversed and it is $-V_{DC}$. The Fig. 2.1 shows the two-level inverter circuit diagram. The output wave form of the two-level inverter is shown in Fig. 2.2. To get two levels at the output we need four switches and one DC voltage source.

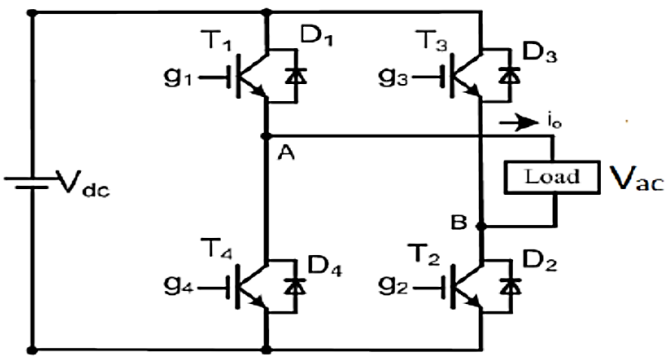

Fig. 2.1 Circuit diagram of two-level Inverter

As shown in the Fig. 2.2, the output voltage consists of +VDC and -VDC it is called two level inverter.

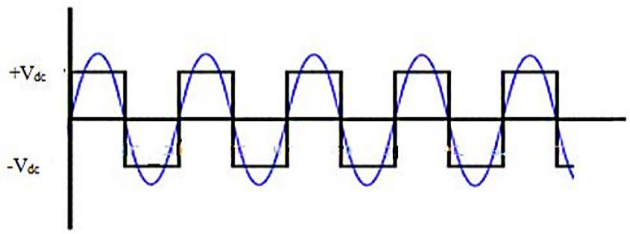

Fig. 2.2 Two-level Inverter output waveform

2.3 Multi-Level Inverters:

For medium-voltage medium power applications the inverter requires devices with high power ratings to withstand high currents and voltages. Therefore, many devices need to be connected in series or parallel strings to obtain the required voltage or current capacity which leads to more costly and complex systems. The low number of steps in the output voltage waveform generates an output power with poor quality where the harmonic content in the output waveform is more thus the output side should have passive filtering components of a large size. A high level of switching losses is obtained, which in turn reduces the system efficiency. To overcome all these limitations the conventional inverters were placed with multi -level inverter in many industrial applications. Multilevel inverters are employed in universal power conditioner (UPC) and ac traction drive systems and also, these configurations are used for recent development in flexible AC transmission system (FACTS).

The main multilevel topologies are classified into three categories:

1. Diode-Clamped Multilevel Inverter
2. Flying Capacitor Multilevel Inverter
3. Cascaded H-bridge Multilevel Inverter

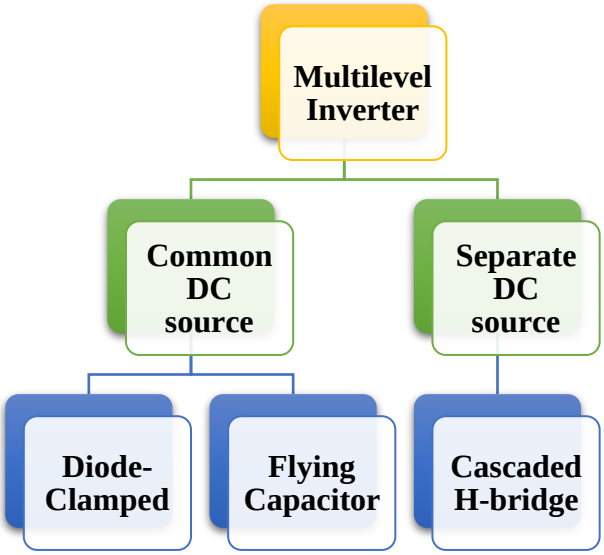

Fig. 2.3 Classification of Multi-Level Inverters

These three multilevel topologies are used in the power industry but diode clamp and flying capacitor have some disadvantages like capacitor voltage balancing, bulk size of

capacitors, and requires a large number of diodes as level increases. Cascaded H-bridge multilevel inverter overcomes all these problems, and it is also suitable for medium and high-power applications. The most attractive features of multilevel inverters when compared with conventional two -level converter are as follows:

- They can generate output voltages with extremely lower distortion.
- They draw input current with very low distortion.
- They generate smaller common mode (CM) voltage, thus reducing the stress in the motor bearings. In addition, using sophisticated modulation methods, CM voltages can be eliminated.
- They can operate with the lower switching frequency and also higher switching frequency PWM. Usage of lower switching frequency result in lower switching losses and higher efficiency.

2.4 Cascaded H- bridge Multilevel Inverter:

Cascaded H-bridge (CHB) multilevel inverter is one of the popular converter topologies used in high-power medium-voltage (MV) drives. It is composed of multiple units of single-phase H-bridge power cells. The H-bridge cells are normally connected in cascade on their ac side to achieve medium-voltage operation and low harmonic distortion. In practice, the number of power cells in a CHB multilevel inverter is mainly determined by its operating voltage and manufacturing cost.

The series H-bridge inverter appeared in 1975. The cascaded multilevel inverter was not fully realized until two researchers, Lai and Peng. They patented it and presented its various advantages in 1997. Since then, the CHB-MLI has been utilized in a wide range of applications. With its modularity and flexibility, the CHB-MLI shows superiority in high-power applications, especially shunt and series-connected FACTS controllers. The CHB-MLI synthesizes its output nearly sinusoidal voltage waveforms by combining many isolated voltage levels.

A three-phase CHB-MLI topology is essentially composed of three identical phase legs. Each identical phase leg consists of the series-chain of H-bridges, which can generate different output voltage waveforms and offers the potential for AC system phase-balancing. This feature is impossible in other VSC topologies utilizing a common DC link. Since this topology consists of series power conversion cells, the voltage and power level may be easily scaled. The de-link

supply for each H-bridge is provided separately, and this is typically achieved using diode rectifiers fed from isolated secondary windings of a three-phase transformer.

The Cascade multilevel inverter is a type of DC-AC converter that has H bridge construction in its circuit topology. The combination of elements of capacitors and switches forms an H bridge structure with a separate DC input source. Each H bridge is capable of producing three levels positive V_{dc}, Zero, and negative V_{dc}. The advantage of this type of multilevel inverter is that it requires only fewer components when compared with other inverter topologies.

Multilevel inverter eliminates the use of bulk transformers in the conventional multiphase inverter, clamping diodes in diode-clamped inverters, and finally flying capacitors in flying capacitor inverter. But these types of inverters require isolated voltages to supply each cell of the bridge.

This multilevel inverter produces desired voltage levels from several separate dc sources. Every DC source is connected to an H bridge inverter. The ac output voltages obtained from different level inverters are connected in series.

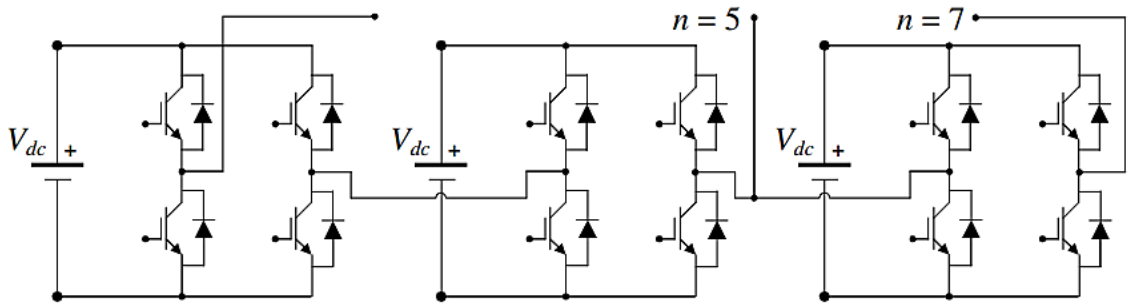

Fig 2.4 Cascaded Multilevel Inverter

2.5 Operation of CHB-MLI:

A typical configuration of a three-phase seven-level CHB multilevel inverter is shown in fig. 2.4, where each phase leg consists of three H-bridge cells powered by three isolated de supplies of equal voltage. The de supplies are normally obtained by using multi-pulse diode rectifiers.

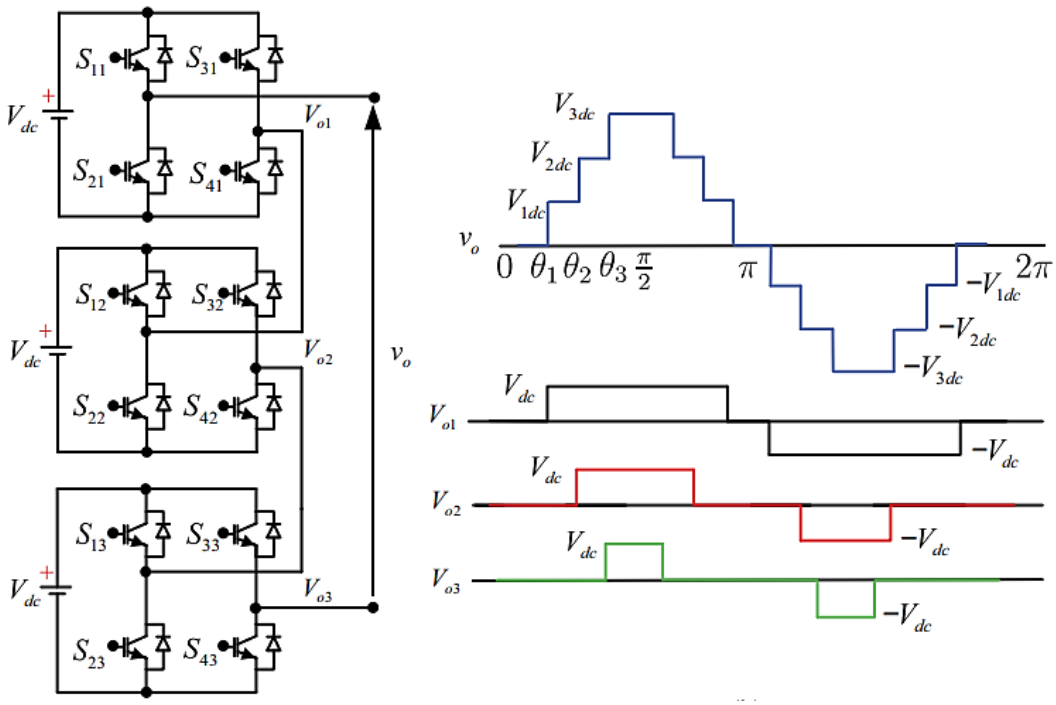

Fig 2.5 a) 7-level CHB inverter topology b) 7-level inverter output waveform

The CHB-MLI in fig. 2.4 can produce an inverter phase voltage with seven voltage levels as shown in fig 2.2. When switches S_{11}, S_{41}, S_{12}, S_{42}, S_{43} and S_{23} are in conduction, then the output voltage of the H- bridge cells H_1, H_2 and H_3 is $V_{H1} = V_{H2} = V_{H3}$=Vdc, and the resultant inverter phase voltage is $V_0 = V_{H1} + V_{H2} + V_{H3} = 3V_{dc}$.Where V_0 is the voltage at the inverter terminal V_{01} with respect to the inverter neutral O. Similarly, with S_{31}, S_{21}, S_{22}, S_{42}. S_{23} and S_{43} are in conduction, V_0 = -3Vdc. The other five voltage levels are 2Vdc, Vdc, 0, and -Vdc, -2Vdc which correspond to switching states are summarized in Table 2.1.

Table 2.1 Switching sequence of seven-level cascaded H-Bridge Inverter

V_o	S_{11}	S_{21}	S_{31}	S_{41}	S_{12}	S_{22}	S_{32}	S_{42}	S_{13}	S_{23}	S_{33}	S_{43}
3Vdc	1	0	0	1	1	0	0	1	1	0	0	1
2Vdc	1	0	0	1	1	0	0	1	1	0	1	0
1Vdc	1	0	0	1	1	0	1	0	1	0	1	0
0	1	0	1	0	1	0	1	0	1	0	1	0
-1Vdc	0	1	1	0	1	0	1	0	1	0	1	0
-2Vdc	0	1	1	0	0	1	1	0	1	0	1	0
-3Vdc	0	1	1	0	0	1	1	0	0	1	1	0

Some voltage levels can be obtained by more than one switching state but in above tables redundant switching states are represented for seven level CHB-MIL. Because switching state redundancy provides great flexibility for switching pattern design, especially for space vector modulation schemes. The output voltage of the inverter is almost sinusoidal, and it has less than 5% total harmonic distortion with each of the H-bridges switching only at a fundamental frequency.

It should be noted that each switching device only conducts for 180° (half cycle), regardless of the pulse width of a quasi-square wave. By this switching method, the current stress on the devices is made equal. The output of the inverter is a square wave this output cannot be fed to real-time applications, it must be sinusoidal. The square wave needs to be analyzed with a sine wave by using the Fourier series.

2.6 Advantages of CHB-MLI

1. The regulation of the DC buses is simple.
2. Modularity of control can be achieved. Unlike the diode clamped and capacitor clamped inverter where the individual phase legs must be modulated by a central controller, the full-bridge inverters of a cascaded structure can be modulated separately.
3. Requires the least number of components among all multilevel achieve the same number of voltage levels as shown in Table 2.3.
4. Soft-switching can be used in this structure to avoid bulky and lossy resistor capacitor-diode snubbers.

Table 2.2: Comparison of multilevel inverters in different aspects

Inverter Configuration	Diode- clamped	Flying capacitor	Cascaded H-bridge
Main switching devices	2(n-1)	2(n-1)	2(n-1)
Main diodes	2(n-1)	2(n-1)	2(n-1)
Clamping diodes	(n-1) (n-2)	0	0
Dc bus capacitors	(n-1)	(n-1)	(n-1)/2
Balancing Capacitors	0	(n-1) (n-2)/2	0

2.7 Disadvantages of CHB-MLI

1. Communication between the full-bridges is required to achieve the synchronization of reference and the carrier waveforms
2. Needs separate de sources for real power conversions, and thus its applications are somewhat limited.

2.8 Conclusion:

In each topology, the required number of main switches and main diodes are same. But DC bus capacitors in cascaded H-bridge multilevel inverter are half of the number when compared to other topologies. Clamping diodes and Balancing capacitors are absent in CHB-MLI. So CHB-MLI requires the least number of components among these three multilevel converters to achieve the same number of voltage levels.

CHAPTER 3:

SELECTIVE HARMONIC ELIMINATION AND THD MINIMIZATION

3.1 Introduction:

Selective harmonic elimination is a pre-programmed PWM technique that eliminates the selected harmonics along with control of the fundamental voltage and works with a device switching frequency equal to the fundamental converter output frequency. The output voltage consists of summed quasi-square waves, the spectrum of such a waveform will contain some low order harmonic distortion.

The dominant 3rd, 5th, 7th and 11th harmonics cause the biggest problem since they may be difficult to filter. This may result in a requirement for large filtering components which increase the converter loss and size significantly.

For a seven-level converter, three switching angles, a_1, a_2, as, can be optimized to create the desired fundamental component without producing the undesired 3rd and 5th harmonics.

3.2 Importance of Fourier Series:

Fourier series helps in converting a periodic waveform to a series of sine waves having different frequencies.

Fourier series can be applied to periodic signals as

1. Trigonometric form
2. Exponential form

The signal is said to be periodic if it is repeated at regular intervals of time. Here the signal is used to be trigonometric form

$$f(t) = a_0 + \sum_{n=1}^{\infty}(a_n \cos\ n\, w_o t + b_n \sin n\ w_o t\ ) \qquad \text{--- (3.1)}$$

$a_0 = DC\ value$

$a_n =$ Co − efficient of cosine

$b_n =$ Coefficient of sine

$w_o = Angular\ frequency = \dfrac{2\pi}{T}$

After deriving individual coefficients, the equations obtained are as follows:

$$a_0 = \frac{1}{T} \int_{\frac{-T}{2}}^{\frac{T}{2}} f(t).dt \qquad \text{--- (3.2)}$$

$$a_n = \frac{1}{T} \int_{\frac{-T}{2}}^{\frac{T}{2}} f(t) cos n w_o t \, dt \qquad \text{--- (3.3)}$$

$$b_n = \frac{1}{T} \int_{\frac{-T}{2}}^{\frac{T}{2}} f(t) sin \, n w_o t \, dt \qquad \text{--- (3.4)}$$

For a cascaded inverter with m levels (including 0) per half phase, the output voltage per leg is considering fig2.2(b)

$$V_0 = V_{01} + V_{02} + V_{03} + \ldots . + V_{0(m-1)} \qquad \text{--- (3.5)}$$

Due to the quarter-wave symmetry along the x-axis, both Fourier coefficients a_0 and a_n are zero. We get only b_n

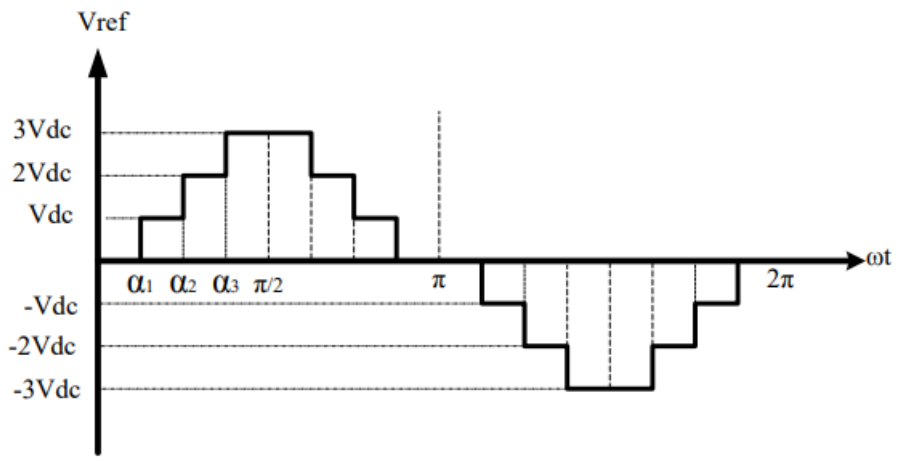

Fig 3.1 Odd quarter wave symmetry of Seven level cascaded H bridge

Where a_1, a_2 and a_3 are the switching angles

$$v(\omega t) = \sum_{n=1,3,5,..}^{\infty} V_n Sin(na_i) \qquad \text{--- (3.6)}$$

$$V_n = \frac{4v_{dc}}{n\pi} \sum_{i=1}^{s} Cos(na_i) \qquad \text{--- (3.7)}$$

where,

Vn is the amplitude of the nth harmonic

S is the no of inverter cells

For a 7-level inverter, s value is 3

3.3 Selective Harmonic Elimination:

For practical implementation of seven level output voltage considered with equal DC sources each having a cell voltage of 85.15 V

Pulse width modulation (PWM) strategies of the multilevel inverter are generally categorized into two types:

- Sinusoidal PWM and Space vector for higher switching frequencies
- Selective Harmonic Elimination and Selective Harmonic mitigation for low switching frequencies.

Among all the available PWM techniques SHE technique is widely used as it is more suitable for medium and low voltage, high power applications. As the switching frequency is low they possess low switching losses, higher efficiency, low cost and the size of the filter requirement is less. By solving N non-linear trigonometric equations, this method helps to eliminate (N-1) lower order harmonics and maintains desired fundamental magnitude.

The main aim of the SHE-PWM technique is that to eradicate few low order harmonics, by using the low pass filter the higher order harmonics are removed from the output signal. As the triple n harmonics are absent in the three phase three wire system so it is not much necessary to consider them.

For three –phase seven level CHB inverter, we require three non-linear equations in order to satisfy the fundamental magnitude and eliminate the targeted harmonics.

$$V_1 = \frac{4V}{\pi}[cos\,(\alpha_1) + cos\,(\alpha_2) + cos\,(\alpha_3)] \quad \text{--- (3.8)}$$

$$V_3 = \frac{4V}{\pi}[cos\,(3\alpha_1) + cos\,(3\alpha_2) + cos\,(3\alpha_3)] \quad \text{--- (3.9)}$$

$$V_5 = \frac{4V}{\pi}[cos\,(5\alpha_1) + cos\,(5\alpha_2) + cos\,(5\alpha_3)] \quad \text{--- (3.10)}$$

Switching angles α_1 to α_3 satisfy the following condition,

$$0 \leq \alpha_1 \leq \alpha_2 \leq \alpha_3 \leq \pi/2$$

Our objective is to eliminate harmonics of order 3rd ,5th and to obtain the desired fundamental voltage over modulation range $0 \leq M \leq 1$

Hence the above equations can be written as

$$[cos\,(\alpha_1) + cos\,(\alpha_2) + cos\,(\alpha_3)\,] = 3 * \mathrm{M} \qquad \text{--- (3.11)}$$

$$[cos\,(3\alpha_1) + cos\,(3\alpha_2) + cos\,(3\alpha_3)\,] = 0 \qquad \text{--- (3.12)}$$

$$[cos\,(5\alpha_1) + cos\,(5\alpha_2) + cos\,(5\alpha_3)\,] = 0 \qquad \text{--- (3.13)}$$

Where M is Modulation index, which is defined as M = $\frac{\pi V1}{4\,s\,V_{dc}}$

s = No. of cells

3.2.1 Objective function for SHE technique:

```
function f = ObjFun(a)
    e1 = 3*M-(cos(a1) + cos(a2) + cos(a3));
    e2 = (cos(3*a1) + cos(3*a2) + cos(3*a3));
    e3 = (cos(5*a1) + cos(5*a2) + cos(5*a3));
    f = min((0.83*abs(e1)) + (0.11*abs(e2)) + (0.06*abs(e3)));
```

Here, the weighted sum method is used to make a multi objective problem into a single objective problem. Where weights are W1=0.83, W2=0.11, W3 =0.06

3.2.2 Limitation of SHE PWM technique:

As this technique mainly targets the selected dominant low order harmonics and no control over the other available other harmonics in the circuit.

3.3 Introduction to Modulation Index:

The relation between the fundamental voltage and the maximum obtainable voltage is given by the modulation index. *M* is defined as the ratio of fundamental output voltage (V1) to maximum obtainable fundamental voltage V_{1max}. V_{1max} can be obtained by keeping all switching angles to zero degrees.

$$M = \frac{V_1}{V_{1max}} \qquad \text{--- (3.14)}$$

In order to calculate the value of m for the first harmonic knowing all switching angles for one cascaded configuration, it is enough to use the Fourier series:

$$\mathrm{m} = \frac{2}{T}\int_0^T V sin(2\pi f k t)dt$$

$$= \frac{2}{T}\int_0^T V sin\omega t\, dt \quad (\omega = 2\pi \mathrm{f}) \qquad \text{--- (3.15)}$$

where T presents the fundamental period,

f is the fundamental frequency and

ω angular frequency being k=1 for the first harmonic.

In order to present (2) in the angle domain, a simple equality can be introduced

$$d\alpha = d\,(\omega t) = \omega\, dt = \frac{2\pi}{T}\, dt \;\text{------}\rightarrow dt = d\alpha \frac{T}{2\pi} \qquad \text{--- (3.16)}$$

The expression (3) for calculating the modulation index m for the first harmonic becomes

$$m = 2\,\frac{1}{2\pi}\int_0^{2\pi} V\, sin\alpha\, d\alpha \qquad \text{--- (3.17)}$$

Considering that the quarter-wave symmetry

$$m = 2\,\frac{1}{2\pi}\int_0^{2\pi} V sin\,\alpha\, d\boldsymbol{\alpha}$$

$$= 2\,\frac{1}{\frac{\pi}{2}}\int_0^{\frac{\pi}{2}} V\, sin\alpha\, d\alpha$$

$$= \frac{4}{\pi}\int_0^{\frac{\pi}{2}} V\, sin\alpha\, d\alpha \qquad \text{--- (3.18)}$$

For 3 cell inverter m is given as:

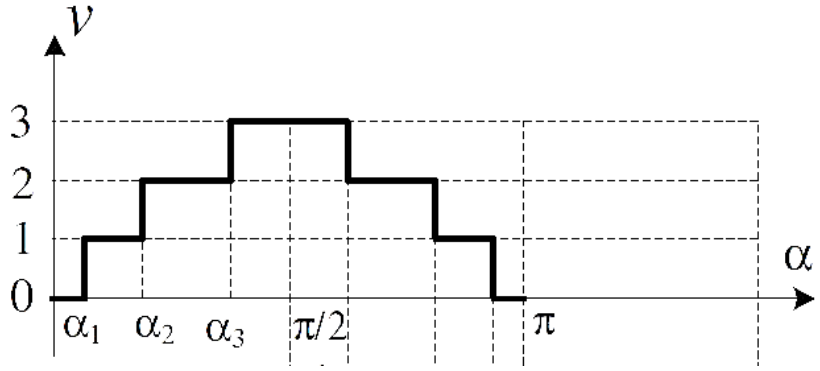

Fig 3.2 waveform for three switching angles

$$m = \frac{4V}{\pi}[cos\alpha_1 + cos\alpha_2 + cos\alpha_3] \qquad \text{--- (3.19)}$$

Here m = fundamental output voltage

Considering the equation (3.14) we can derive relation between M (Modulation Index) and *m* fundamental output voltage

$$M = \frac{V_1}{V_{1max}}$$

$$V_{1max} = \frac{4*s*V_{dc}}{\pi} \qquad \text{--- (3.20)}$$

Substitute (3.20) in equation (3.14) we get

$$M = \frac{V_1}{\frac{4 * s * V_{dc}}{\pi}}$$

$$M = \frac{V_1 * \pi}{4 * s * V_{dc}} \quad \text{--- (3.21)}$$

In the above equation V_1 is the fundamental output voltage as same as '*m'* in equation (3.19)

Replacing the V_1 with '*m'* the equation (3.21) changes as follows

$$M = \frac{m * \pi}{4 * s * V_{dc}} \quad \text{--- (3.22)}$$

Considering the reference [17] to prove the relation between *m* and *M* the equations are explained below.

m = 2.19 (fundamental component) M =?

Considering of equation (3.22), substituting m = 2.19, s = 3 (for seven level CHB, cells = 3) and $V_{dc} = 1$ the we get

$$M = \frac{2.19 * \pi}{4 * 12 * 1}$$

$$M = 0.57$$

Hence in order to reach the fundamental output voltage of 2.19, we need to have the modulation index M as 0.57

3.4 Total Harmonic Distortion Minimization Technique:

To overcome the limitation of SHE technique and to have a wide range of control over the other harmonics there is one technique known as THD minimization. SHE techniques can totally eliminate certain low-order harmonics, they do not have a minimization impact on either voltage or current THD, taking into account the whole harmonic content. To evaluate and optimize multilevel power quality, the research community typically uses a limited harmonics count (51, as recommended by Institute of Electrical and Electronics Engineers (IEEE) Standard 519 or others, like 101) that can result in underestimating it.

Recently, there have not been so many developments where the infinite harmonic content is taken into account for the power estimation in multilevel inverters. One reason may be a generally high complexity of a possible mathematical approach or the fact that sometimes there is no practical need to consider infinitely many harmonics. Recent publications have shown that it is quite feasible to consider an infinite harmonic content for the voltage THD when making multilevel voltage waveform analysis in the time domain.

Finding the best switching angles for a particular modulation index m is required to get the lowest output voltage and output current THDs. One potential cause of inaccuracy is the problem formulation in the frequency domain, which is a generic optimization that takes a restricted harmonic count into account. The optimization issue must be phrased in the time domain and as a restricted optimization problem in order to obtain an optimal solution that takes into account all harmonics.

The accurate definition and minimization of exact closed form equations for output voltage and output current ripple approximation error normalized mean square (hereafter, voltage and current ripple) may be used to estimate optimal switching angles. To achieve this, a design up to three cascaded H-bridges using a seven-level inverter is used.

3.4.1 Voltage Ripple NMS equation

It is critical to generate a voltage THD form using the voltage NMS criterion after defining the voltage NMS criterion. Simple mathematical computations can be used for this purpose. Every signal can be represented as the sum of its fundamental and harmonic components.

THD is defined as the ratio of all harmonic components' rms value to the fundamental component's rms value

$$THD = \sqrt{\frac{\sum_{n=1}^{\infty}(V_n{}^2)}{V_1}} \qquad \text{--- (3.23)}$$

The voltage ripple NMS can be written as

$$NMS_v(\alpha) = \frac{2}{\pi}\int_0^{\frac{\pi}{2}} \Delta v^2 d\alpha = \frac{2}{\pi}\int_0^{\frac{\pi}{2}} v^2 d\alpha \ - \ \frac{2}{\pi}\int_0^{\frac{\pi}{2}} v_1{}^2 d\alpha \qquad \text{--- (3.24)}$$

For calculating NMS value of the voltage fundamental the last integral form can be expressed as a function of modulation index

$$NMS_{V_1}(\mathrm{m}) = \frac{2}{\pi}\int_0^{\frac{\pi}{2}} v1^2 d\alpha \ = \frac{2}{\pi}\int_0^{\frac{\pi}{2}} m^2 sin^2 d\alpha = \frac{1}{2}m^2 \qquad \text{--- (3.25)}$$

The voltage ripple NMS for n level H – bridge inverter is

$$NMS_{Vn(\alpha,m)} = \frac{2}{\pi}\int_0^{\frac{\pi}{2}} v^2 d\alpha \ - \ \frac{1}{2}m^2 \qquad \text{---(3.26)}$$

Considering the waveform up to quarter wave symmetry fig.3.1

The above equation can be written as

$$NMS_V(\alpha_{1,}\,\alpha_{2,},\alpha_{3,}\,m) = \frac{2}{\pi}\int_{\alpha_1}^{\alpha_2} d\alpha + \frac{2}{\pi}\int_{\alpha_2}^{\alpha_3} 2^2\, d\alpha + \frac{2}{\pi}\int_{\alpha_3}^{\frac{\pi}{2}} 3^2\, d\alpha$$

$$= 9 - \frac{2}{\pi}(\alpha_1 + 3\alpha_2 + 5\alpha_3) - \frac{1}{2}m^2 \qquad \text{--- (3.27)}$$

It is critical to generate a voltage THD form using the voltage NMS criterion after defining the voltage NMS criterion. Simple mathematical computations can be used for this purpose. Every signal can be represented as the sum of its fundamental and harmonic components.

$$x(t) = x_1(t) + \sum_k x_k(t) \qquad \text{--- (3.28)}$$

$$x_{rms}^2 = \frac{1}{T}\int_0^T [x_1(t) + \sum_k x_k(t)]^2 \qquad \text{--- (3.29)}$$

$$x_{rms}^2 = x_{1rms}^2 + x_{rms,dist}^2 \qquad \text{--- (3.30)}$$

The overall harmonic distortion of the signal x(t) is calculated as follows:

$$\text{THD} = \frac{Xrms\ dist}{X1\ rms} \qquad \text{--- (3.31)}$$

The normalized rms value of a single-phase n-level inverter's voltage ripple NMS is:

$$V_{rms}(m) = \sqrt{NMS\ (\alpha_1, \alpha_2, \frac{\alpha_{n-1}}{2}, m)} \qquad \text{---(3.32)}$$

The voltage THD formula can be written as the square root of the normalized mean square voltage ripple divided by the normalized fundamental component of the voltage:

$$THD_v(\%) = \frac{\sqrt{NMS\ (\alpha_1, \alpha_2, \frac{\alpha_{n-1}}{2}, m)}}{Vrms,norm} * 100 \qquad \text{--- (3.33)}$$

The normalized fundamental component of voltage is defined as:

$$Vrms, norm = \frac{mV_{dc}}{\sqrt{2}}\frac{1}{V_{dc}} = \frac{m}{\sqrt{2}} \qquad \text{---(3.34)}$$

$$THD_v(\%) = \frac{\sqrt{2NMS_V}}{m} * 100 \qquad \text{---(3.35)}$$

For a given modulation index m, the voltage THD optimization problem is formulated as a constrained optimization one with THD in equation (NMS in equation) as a target function to be minimized. This includes the modulation index m as an equality constraint and staircase modulation-imposed limitations on switching angles similar to as inequality constraints

3.5 THD MINIMIZATION APPLYING ON PHASE VOLTAGE

It is effective to use OMTHD to calculate the switching angles in order to reduce waveform THD while generating the desired fundamental component. The fundamental component is either treated as a constraint or its error is added to the objective function of the optimization algorithm, which has the objective of minimizing THD. Phase voltage has a simple and unique waveform, and its THD can be easily formulated, compared to the line to-line voltage which changes the form as switching angles vary. Therefore, in THD minimization of a multilevel inverter's output, it is quite common to apply the minimization algorithm on the phase voltage.

In three-phase three-wire applications, however, the inverter line-to-line voltage is of the main concern, since it determines the load-voltage harmonic contents. Even the load phase voltage contains those harmonic orders present in the inverter's line-to-line voltage.

Fourier analysis of such a waveform yields the following expression for the rms value of fundamental and harmonic components of the phase voltage. Because of quarter-wave symmetry in the waveform, it contains odd-order harmonics only. The maximum possible value of the fundamental component is obtained when α1, α2, and α3 are all equal to zero and is given by

$$V_n = \begin{cases} \dfrac{2\sqrt{2Vdc}}{n\pi}(cos\ (n\alpha_1)\ +cos\ (n\alpha_2)\ +cos\ (n\alpha_3)\ ), & for\ odd\ n \\ 0 \end{cases}$$

Because of quarter-wave symmetry in the waveform, it contains odd-order harmonics only. The maximum possible value of the fundamental component is obtained when α1, α2, and α3 are all equal to zero and is given by

$$V_{1max} = \frac{6\sqrt{2}V_{dc}}{\pi} \qquad \text{--- (3.36)}$$

Normalizing the fundamental component based on its maximum value and presenting it in per unit (p.u.)

$$V_1^{pu} = \frac{V_1}{V_{1max}} = \frac{1}{3}\ (cos\ (n\alpha_1)\ +cos\ (n\alpha_2)\ +cos\ (n\alpha_3)\ ) \qquad \text{--- (3.37)}$$

Also, the harmonic components can be normalized on the same base as follows

$$\frac{V_n}{V_{1max}} = \frac{1}{3n}\ (cos\ (n\alpha_1)\ +cos\ (n\alpha_2)\ +\ cos\ (n\alpha_3)\ ) \qquad \text{--- (3.38)}$$

Considering the waveform, the phase-voltage rms value can be easily calculated

$$V_{rms} = \sqrt{\frac{2}{\pi}\left(\int_0^{\frac{\pi}{2}} V^2\, dwt\right)}$$

$$= V_{dc}\sqrt{\left(\frac{2}{\pi}(\alpha_2 - \alpha_1) + 4\left((\alpha_2 - \alpha_1) + 9\left(\frac{\pi}{2} - \alpha_3\right)\right)\right)} \quad \text{--- (3.39)}$$

Additionally, in per unit, on the same base as for its components

$$V_{rms}^{p.u} = \frac{V_{rms}}{V_{1(max)}}$$

$$V_{rms}^{p.u} = \sqrt{\frac{\pi}{36}[((\alpha_2 - \alpha_1) + 4((\alpha_2 - \alpha_1) + 9\left(\frac{\pi}{2} - \alpha_3\right)]} \quad \text{--- (3.40)}$$

THD is defined as the ratio of all harmonic components' rms value to the fundamental component's rms value and is expressed as follows:

$$(THD)_{Phase} = \frac{\sqrt{\sum_{n=2}^{\infty} V_n^2}}{V_1} = \sqrt{\left[\frac{V}{V1}\right]^2} - 1 \quad \text{--- (3.41)}$$

Substituting V_1 and V_n the following analytical expression is obtained for the phase-voltage THD

$$(THD)_{Phase} = \sqrt{\frac{\left(\frac{\pi}{4}[((\alpha_2-\alpha_1)+4((\alpha_2-\alpha_1)+9\left(\frac{\pi}{2}-\alpha_3\right)]\right)}{(cos\,(n\alpha_1) + cos\,(n\alpha_2) + cos(n\alpha_3)\,)^2}} - 1 \quad \text{--- (3.42)}$$

Unlike the phase voltage, line-to-line voltage of the inverter has a waveform which is not as simple as that, and depending on the values of switching angles, it changes the form. As a result, determining its rms value is more difficult than determining the phase voltage, and for the complete range of switching angles, it is impossible to come up with a single analytical expression for the rms value.

Instead, after having specified the waveform of the line voltage for any given values of switching angles, one can calculate its rms value by making use of the stepped waveform and integrating its rectangular segments. To find the line-voltage instantaneous value and so its waveform, we need first to specify the instantaneous phase voltages, it can be expressed in terms of step function u(ωt) as follows

$$\left.\begin{array}{ll} Va(\omega t) = V_{dc}[u(\omega t-\alpha_1)+u(\omega t-\alpha_2)+u(\omega t-\alpha_3)] & 0<\omega t\le\frac{\pi}{2} \\ Va(\pi-\omega t) & \frac{\pi}{2}<\omega t\le\pi \\ -Va(\omega t-\pi) & \pi<\omega t\le 2\pi \end{array}\right\} \quad \text{---(3.43)}$$

Where the step function u(t) is defined as

$$u(\omega t) = \begin{cases} 0, \omega t < 0 \\ 1\,, \omega t \ge 0 \end{cases} \quad \text{--- (3.44)}$$

Phase voltage V_b has the same waveform but is lagging Va by 2π/3 radians. It can be expressed in terms of Va as follows:

$$V_b(\omega t) = \{Va\left(\omega t+\frac{2\pi}{3}\right), 0\le\omega t\le\frac{4\pi}{3}\ Va\left(\omega t-\frac{4\pi}{3}\right), \frac{4\pi}{3}\le\omega t\le 2\pi \quad \text{--- (3.45)}$$

The line voltage V_{ab} can now be obtained by subtracting V_b from V_a

$$V_{ab}(\omega t) = V_a(\omega t) - V_b(wt) \quad \text{--- (3.46)}$$

Having specified V_{ab}, the line-voltage rms value $V_L$can now be calculated

$$V_L = \sqrt{\frac{1}{2\pi}\int_0^{2\pi} {V_{ab}}^2(\omega t)d\omega t} \quad \text{--- (3.47)}$$

Because of symmetry, the fundamental components of the phase voltages Va and V_b have the same amplitude and 120◦ phase difference. Therefore, the rms value of the line-voltage fundamental component is √3 times that of the fundamental component of the phase voltage.

$$V_L = \sqrt{3V_1} = \frac{2\sqrt{6}V_{dc}}{\pi}(cos\ (\alpha_1)\ +cos\ (\alpha_2)\ +cos\ (\alpha_3)\ ) \quad \text{--- (3.48)}$$

In per unit, based on its own possible maximum value, the line-voltage fundamental component is expressed by the same equation as (3.47)

$$V_{L1}^{pu} = \frac{V_{L1}}{V_{L1max}} = \frac{1}{3}(cos\ (\alpha_1)\ +cos\ (\alpha_2)\ +cos\ (\alpha_3)\ ) \quad \text{--- (3.49)}$$

Finally, the following equation is used to calculate THD of the line voltage:

$$(THD)_L = \sqrt{\left[\frac{V_L}{V_{L1}}\right]^2 - 1} \quad \text{--- (3.50)}$$

3.5.1 Objective Function of THD minimization in terms of NMS Equation

Objective Function For NMS:

```
fun=@(x)(9-((2/pi)*(x(1)+(3*x(2))+(5*x(3))))-(1/m^2));
```
--- (3.51)

3.5.2 Objective function of THD minimization on phase voltage.

```
function f = ObjFunRMS(a)
a1 = a(1);
a2 = a(2);
a3 = a(3);
M = 0.57;
E1 = (3*M) - (cosd(a1) + cosd(a2) + cosd(a3));
a1 = deg2rad(a1);
a2 = deg2rad(a2);
a3 = deg2rad(a3);
E2=sqrt(((pi/4)*((a2-a1)+4*(a3-a2)+9*((pi/2)a3))/(((cos(a1))+(cos(a2))+(cos(a3)))^2))-1);
f = min(0.5*abs(E1)+0.5*abs(E2));
```

3.6 Calculating V_{dc} based on Load requirement:

Let the required output voltage be 230 = V_{out}

$V_{out} = V_{RMS} = 230$ V

$$V_{RMS} = \frac{V_m}{\sqrt{2}}$$

$$V_m = \sqrt{2} * V_{RMS}$$

$V_m = \sqrt{2} * 230 = 325.269$ V peak

$$M = \frac{\pi * V_m}{12 * V_{dc}} \quad \text{--- (3.52)}$$

Let M = 1 --- (3.53)

Substituting equation (3.53) in (3.52) we get V_{dc} as

$$V_{dc} = \frac{\pi * V_m}{12}$$

$$V_{dc} = \frac{\pi * 325.296}{12} = 85.15 \text{ V} \quad \text{--- (3.54)}$$

CHAPTER 4
EVOLUTIONARY ALGORITHMS

4.1 Introduction

Evolutionary competition is a problem-solving technique whose principles are based on the theory of biological evolution such as genetic inheritance and natural selection. These techniques are used to solve the nonlinear transcendental equations to obtain triggering angles of a three-phase seven-level cascaded H-bridge (CHB) inverter and also eliminate 5th and 7th order harmonics, minimizing THD of other harmonics while satisfying the requested fundamental component. A comparative study has been made on PSO, ABC, and DE optimization techniques. Here the main objective is taken as a minimization problem.

The optimization methods are two types. They are as follows

1. Traditional optimization Methods
2. Non- Traditional optimization methods (Evolutionary algorithms)

We can use classical/traditional optimization techniques or Evolutionary algorithms to solve the optimization problems.

4.2 Steps involved in an optimization problem

- Problem formulation or modeling
- Identify problem parameters
- Choose design variables from the parameters
- Formulate constraints
- Formulate objective function
- Set up variable bounds
- Choose an optimization algorithm
- Obtain solution

4.2.1 Defining Objective Function

It is the mathematical equation that is used to represent and solve optimization problems either it could be a maximization or minimization problem.

An optimization problem contains three important aspects:

1. Objective function: the property to be optimized, which can be expressed as a linear or non-linear function.

2. Decision variable: an unknown element of an optimization problem.

3. Constraints: restrictions that must be satisfied to produce an acceptable result.

For a stated objective function that is defined on the set of all decision variables, a decision must be found such that the objective is optimized (minimized or maximized).

An optimization problem may be as follows:

$$\min f(x) \text{ ,subject to } x \in \Omega$$

where "f " is a real-valued function called the objective function. The vector "x" is a vector of "n" independent variables x = [x1, x2 . . . xn] where the variables x1, x2 . . . xn, often referred to as decision variables, are selected by the user or designer. The set Ω is a subset of R called the constraint set or feasible set.

The above problem is a decision problem. It involves finding the "best" vector x in compliance with the constraints, or nay, all possible vectors within Ω. The "best" vector is the one that has the smallest value of the objective function. This vector is called the "minimizer". It is possible to have many minimizers.

4.3 Drawbacks of conventional/traditional optimization methods

- Final solution of an optimization problem depends on the randomly chosen initial solution. If the initial solution lies in the local basin, the final solution will get stuck at the local optimum
- Gradient-based methods cannot be used for discontinuous functions
- There is a chance of the solutions of a gradient-based optimization method being trapped in the local minima
- Methods which start with a single initial solution are not suitable for parallel computing
- Integer/discrete variables are difficult to handle using the traditional methods of optimization
- A particular method may not be suitable to solve a variety of problems

To overcome the drawbacks of the traditional optimization methods evolutionary algorithms came into existence. The advantages of evolutionary techniques are as follows:

- Applicable in problems where discontinuities, discrete, mixed integer, and non-linear functions are present
- Suitable to solve problems where multiple solutions are sought:
- Multi-modal optimization problems
- Multi-objective optimization problems
- Parallel implementation is easier for computationally expensive problems

4.4 Evolutionary Algorithms

Here in this project, three different metaheuristic techniques have been used the Particle Swarm Optimization algorithm, the Ant Bee Colony algorithm, and the Differential Evolution algorithm. Exploration and exploitation are the two fundamental tactics used by the metaheuristic optimization algorithms to find the global optimum. The exploitation phase expresses the ability to achieve the global optimal solution, which is likely to exist around the local solutions discovered, whereas the exploration process is successful in enabling the algorithm to reach the best local solutions inside the search space. A metaheuristic algorithm must be able to quickly converge to the linked objective function's global optimum solution.

Additionally, for practical applications, the run-time needed by a metaheuristic algorithm to reach the global minimizer and the overall calculation amount must be at acceptable levels. The explanation of these three algorithms can be explained in the following concepts

4.5. Particle Swarm Optimization Algorithm

Kennedy and Eberhart created Particle Swarm Optimization (PSO) in 1995, based on the social behavior of animal swarms (e.g bird blocks and fish schools).

4.5.1 Implementing Particle Swarm Optimization Algorithm

STEP 1: Initialization

First, the size of the swarm is determined, (from empirical studies the common range of size of the swarm is between 20 and 500). The PSO parameters are assigned as c_1 =1.5, c_2=1.5. Each particle has its velocity and position. In the beginning, a random number is assigned to each particle between [100,150] as initial velocity and between as initial position.

STEP 2: Best Position of Particle

Evaluate each particle's position considering the objective function. If a particle's position is better than its previous best position, update it.

STEP 3: Best Particle in Swarm

For all particles, the best particle and its position are recorded.

STEP 4: Velocities and Position Update

The velocities and positions of each particle are updated. The modified velocity and position of each particle can be calculated using the current velocity and the distance from $pbest^{id}$ to $gbest^{d}$ as presented in the following formulas:

$$V_i^{t+1} = W\, V_i^t + C_1\, U_1^t\left(P_{b_1}^t - P_i^t\right) + C_2\, U_2^t\left(g_b^t - P_i^t\right) \quad \text{- - (4.1)}$$

i = 1,2, … . , n and d = 1,2, … . , m.

$$P_i^{t+1} = P_i^t + V_i^{t+1} \quad \text{- - - (4.2)}$$

where *n* is the number of particles in a group; m is the number of members in a particle; w is the inertia weight factor; c_1 and c_2 are acceleration constants; U_1 and U_2 are two random numbers between 0 and 1, P_i^t and V_i^t are the current position and velocity of particle i.

STEP 5: Stopping Criteria

If the maximum number of iterations is reached then break the loop and end the program.

Table 4.1 Optimization specifications of PSO algorithm

Optimization specification	Value
Number of population (NP)	100
Number of dimension (D)	3
Number of iterations (T)	500
Step size of modulation index	0.1
Acceleration coefficients c1, c2	1.5,1.5
Inertia weight w	0.8

4.5.2 FLOWCHART OF PSO ALGORITHM

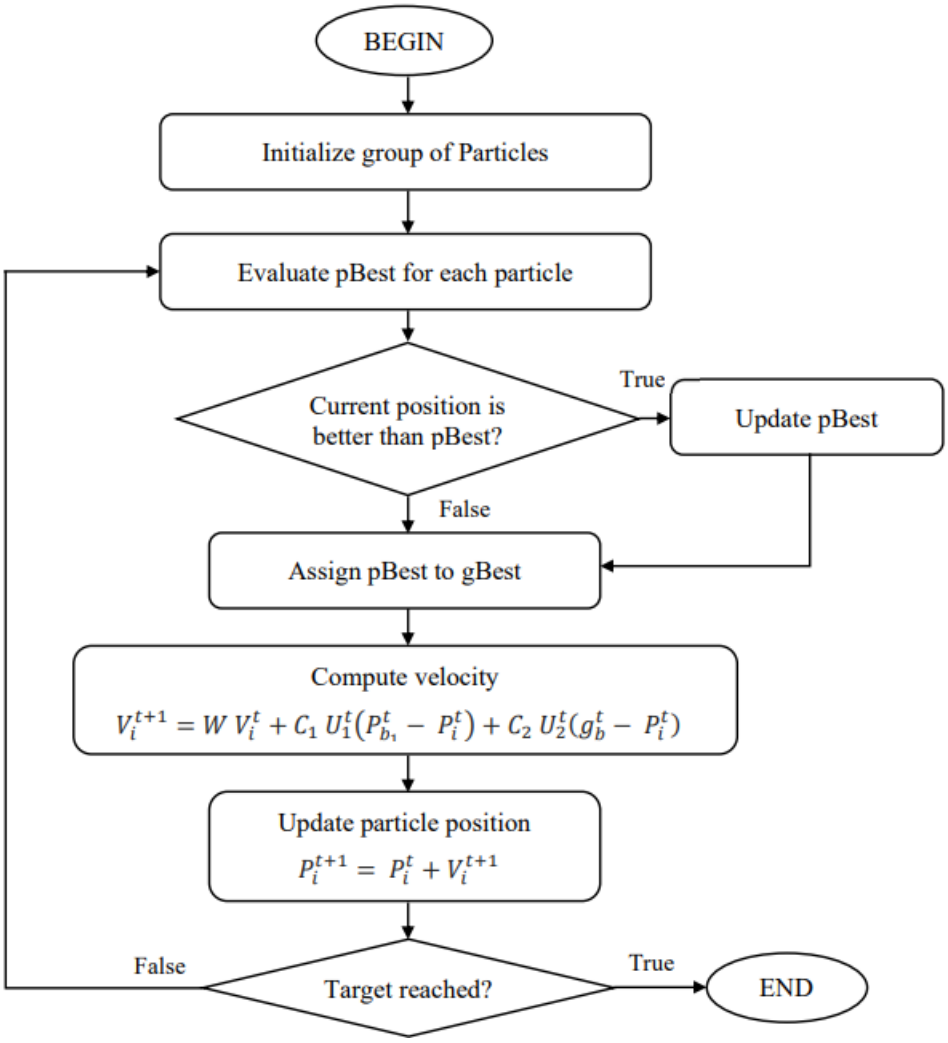

Fig. 4.1 Flow chart of PSO

4.6 Artificial Bee Colony Algorithm

Dervis Karaboga who has proposed the Artificial Bee Colony algorithm, which was first suggested in 2005, and was influenced by the foraging habits of honey bee swarms. Artificial bee colony techniques, which are used for a variety of optimization objectives, including multidimensional and multimodal optimization issues, give a population based on a metaheuristic procedure. This technique combines random search with a form of neighborhood search.

The employed, onlookers, and scout bee groups of bees all search for food sources. Onlookers wait in the dance area as they consider and select a food source. Bees that have been hired fly to the food source and gather the nectar. An employed bee that is a scout is one whose food supply has been abandoned or used up by observers or other employed bees. The new food supply is discovered by a scout. They are looking for locations with abundant nectar-producing food sources, while employed bees do a local search, onlookers and scouts handle a global search.

4.6.1 IMPLEMENTING ARTIFICIAL BEE COLONY OPTIMIZATION ALGORITHMS

Step 1. Initialize the parameters of algorithm

In the first step, the required parameters of the ABC algorithm such as the number of colony size, the value of limit, constraints, and the number of maximum cycles for foraging that is represented by Max cycle are determined.

Step 2.

In the second stage of the algorithm ($\alpha_1, \alpha_2, \alpha_3$), the initial conditions of each employed bee are generated; in other words, each bee in the population is randomly initialized with the following restrictions:

$$\alpha_1 < \alpha_2 < \alpha_3 < \frac{\pi}{2} \qquad \text{- - - (4.3)}$$

Step 3 Evaluating fitness function

The fitness function is derived in the third step of optimization.

$$V_1 = 3 * M(cos\ (\alpha_1) + (cos\ (\alpha_2) + (cos\ (\alpha_3))$$

$$V_5 = (cos\ (5\alpha_1) + (cos\ (5\alpha_2) + (cos\ (5\alpha_3))$$

$$V_7 = (cos\ (7\alpha_1) + (cos\ (7\alpha_2) + (cos\ (7\alpha_3))$$

$$f(i) = min\ ((0.6(V_1) + \big(0.2(V_5)\big) + (0.2(V_7)) \qquad \text{- - - (4.4)}$$

$$Fitness\ f(i) = \frac{1}{f(i)+1} \qquad \text{- - - (4.5)}$$

The first term is related to the fundamental component. Its second and third terms refer to the elimination of the fifth- and seventh-order harmonics.

Step 4 Employed bee evaluating solution and updating it :

Following initialization, the population is put through successive iterations of the employed, onlooker, and scout bees' search cycles. Employed bees search the area for food sources, and if the new source is more suitable than the old one, they switch it out and store the new one in their memory. Then, working bees inform those waiting inside the hive about their food source.

Step 5 Selecting food sources by onlooker bee and evaluating it:

After observing the dance of employed bees and assessing the nectar data collected from all employed bees, each observer chooses a food source. Comparatively to a food source with lower quality, one with higher quality will have a greater chance of being chosen by observers. Then, observers visit that source and, after selecting a nearby neighbour, they assess its nectar output and contrast it with that of its previous neighbour. If the new food source's nectar is superior to the previous one, the previous one is replaced in the memory. The following expression is used to determine the ith food source, which observers choose with the probability P_i:

$$P(i) = \frac{a * Fitness(i)}{(Fitness) + b} \qquad \text{- - - (4.6)}$$

where max(Fitness) denotes the maximum fitness function , a and b are constants with a range of 0 to 1.

Step 6 Finding food sources by scout bees and abandoned food sources:

When food sources remain unimproved for a predetermined number of iterations, they are abandoned, and the bees that were previously employed there become scouts. New food sources are discovered by scouts, and old food sources are replaced

Step 7: Stopping Criteria

If the iteration counter (iter) reaches Maxcycle, the algorithm is finished; if not, iter is increased (iter = iter + 1), and the next step is reached.

Table 4.2. Optimization specifications of ABC algorithm

Optimization specification	Value
Number of population (NP)	100
Number of dimension (D)	3
Number of iterations (T)	500
Step size of modulation index	0.1
Limit	5

4.6.2 Flow Chart of ABC Algorithm

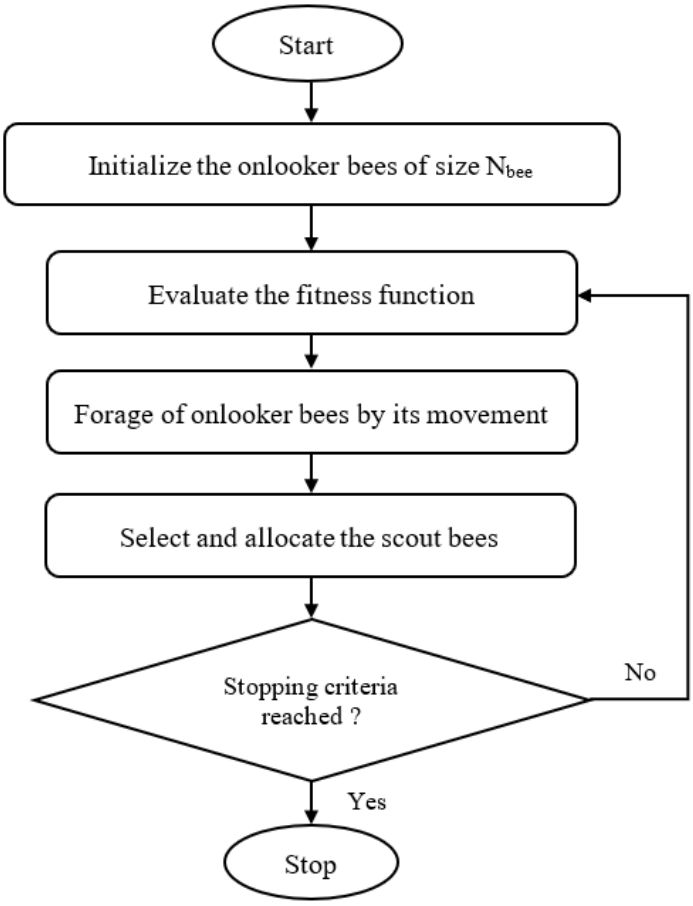

Fig. 4.2 Flow chart of ABC

4.7 Differential Evolution Algorithm

The differential evolution algorithm was created by Kenneth and Storn in the year 1995 as an effective, adaptable, and simple-to-use function optimizer. The DE approach has several advantages, including its ease of use, rapid convergence, and proclivity to achieve the global optimal solution without remaining in local solutions.

4.7.1 Implementing Differential Evolution Optimization Algorithms

STEP 1: Initialization

A population of individuals or vectors is generated randomly

Let $S^G = \{ X_j^G : j = 1,2, \ldots NP\}$ - - - (4.7)

Here G is the generation of population, Np is the population size, and D is the length of search space.

$X_j^G = \{ x_{1,j}^G , x_{2,j}^G ,\ldots , x_{D,j}^G \}$ - - - (4.8)

The above equation is generated using uniformly distributed random numbers as (0,1)

Hence, the obtained equation:

$X_j^G = X_{Low} + (X_{Low} - X_{Low}) * \text{rand } (0,1)$ - - - (4.9)

STEP 2: Mutation

Three vectors are chosen at random in this process, and the first two vectors are subtracted from each other (this is to define a search direction). The difference is multiplied by the scale factor or "F," which can range from 0 to 1. The third vector is added to the resultant vector, as shown in the following equation.

$V_j^G = X_{r3}^G + F * (X_{r1}^G - X_{r2}^G)$ - - - (4.10)

Where V_j^G *is the donor vector*.

For each vector in the population, a donor vector is created.

STEP 3: Recombination

A new vector is generated which is known as a trail vector. Using a crossover factor Cr with values between 0 and 1 and defining the degree of similarity of the trail vector to the donor-vector. If Cr is close to 1, the trail vector will be quite similar to the donor vector; if Cr is close to 0, it will be similar to the target vector.

The trail vector U_j^G , the target vector X_j^G , and the Donor vector V_j^G *are denoted as*

$$\left.\begin{aligned} U_j^G &= \{ u_{1,j}^G , u_{2,j}^G ,. . . , u_{D,j}^G \} \\ X_j^G &= \{ x_{1,j}^G , x_{2,j}^G ,. . . , x_{D,j}^G \} \\ V_j^G &= \{ v_{1,j}^G , v_{2,j}^G ,. . . , v_{D,j}^G \} \end{aligned}\right\} \quad \text{- - - (4.11)}$$

So U_j^G is generated as:

$u_{i,j}^G = v_{i,j}^G$ if $\text{rand}_j \leq C_r$

$x_{i,j}^G$ else

Where i ∈ {1, 2, . . . , D}

STEP 4: Selection

The target vector is compared with the test vector. The vector with the highest fitness remains in the next generation, while the vector with the lowest fitness is eliminated.

$$X_j^{G+1} = U_j^G \text{ if } f(U_j^G) \leq f(U_j^G)$$

$$X_j^G \; Otherwise$$

The direction and convergence speed of the search are influenced by the scale factor (F). A more effective local search is possible in the space if the F factor accepts values between 0.1 and 0.4. The global search is improved by the method if F is between 0.4 and 0.95.

Table 4.3. Optimization specifications of DE algorithm

Optimization specification	Value
Number of population (NP)	100
Number of dimension (D)	3
Number of iterations (T)	500
Step size of modulation index	0.1
Scaling Factor F	0.85
Crossover probability (Cr)	0.8

4.7.2 Flow chart of DE Algorithm

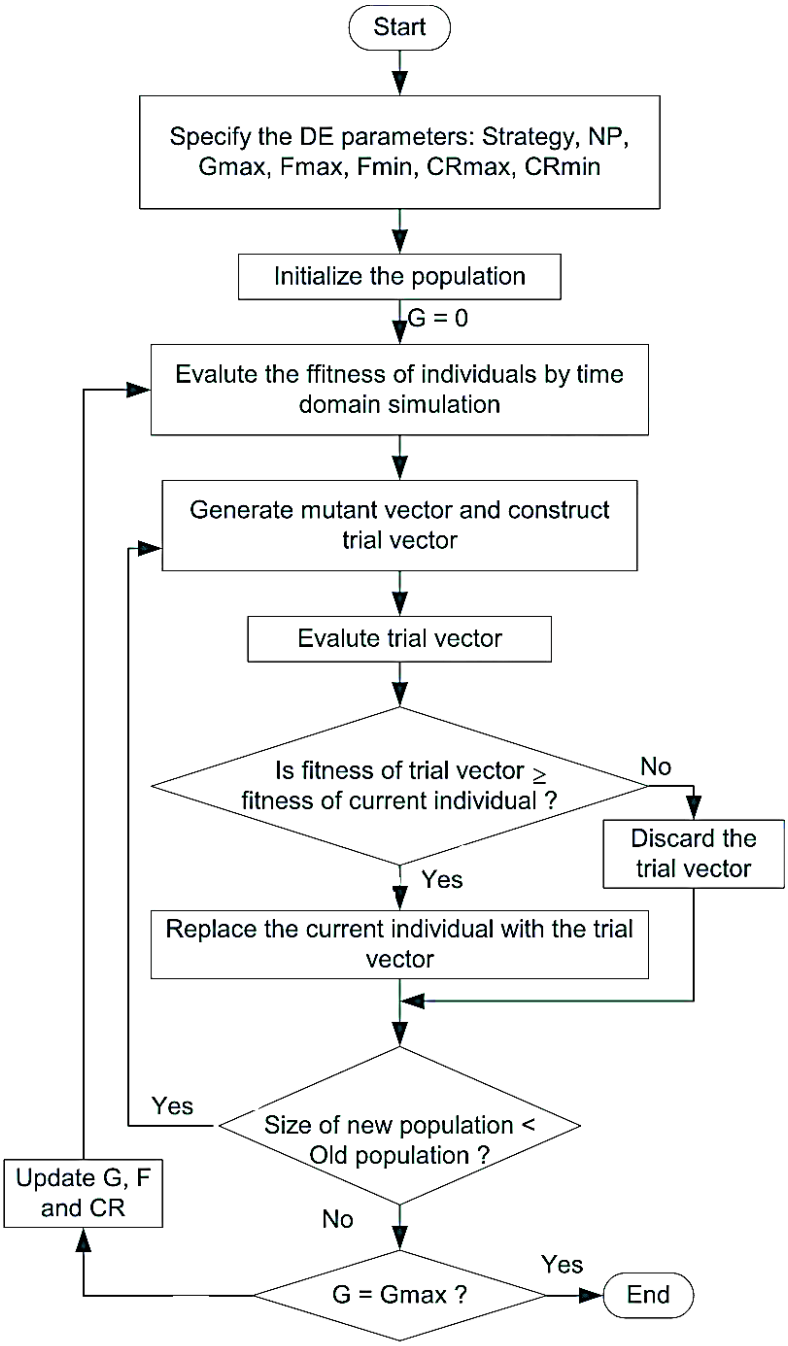

Fig 4.3 Flow chart of DE algorithm

4.8 Applications of EC techniques:

In this project, these 3 algorithms (PSO, ABC, DE) are used to optimize the firing angles so that our application of eliminating and minimizing the THD got fulfilled by minimizing the objective functions. If one algorithm failed to give an optimal solution at some modulation indices than we try to find the solution with another algorithm.

4.8.1. Optimized results for seven-level CHB MLI:

Table. 4.4: Optimized switching angles for a Seven-level CHB MLI for SHE and THD minimization

MI	Firing angles	
	For Elimination	**For THD minimization**
0.57	a1 = 11.71069 a2 = 45.53883 a3 = 88.25856	a1 = 12.66873 a2 = 41.89526 a3 = 90
0.8	a1 = 19.95204 a2 = 20.41325 a3 = 58.47204	a1 = 9.624402 a2 = 30.14067 a3 = 56.68243

In this chapter there will be three major aspects that have been focused clearly. They are as follows:

Case 1: Optimized switching angles for only THD minimization

Case 2: Optimized switching angles for 3rd Harmonic along with THD minimization

Case 3: Optimized switching angles for 3rd and 5th Harmonic elimination, technically focusing on Selective Harmonic Elimination.

4.9. Optimized switching angles for THD minimization only:

The below table represents the results for THD minimization at different modulation indices

Table. 4.5: Switching angles obtained by THD minimization only

M	Switching angles for THD only			%THD
	a1	a2	a3	
0.5	16.3026	57.30224	90	21.59
0.51	15.93519	55.35938	90	20.56
0.52	15.53976	53.37643	90	19.57
0.53	15.11932	51.34603	90	18.65
0.54	14.62906	49.27578	90	17.84
0.55	14.12987	47.13642	90	17.16
0.56	13.59893	44.92477	90	16.68
0.57	13.03013	42.6295	90	16.44
0.58	12.43666	40.22935	90	16.49
0.59	11.76201	37.7212	90	16.90
0.6	11.05016	35.06107	90	17.70
0.61	11.48111	36.79739	87.17701	18.02
0.62	11.46136	36.73269	85.49728	18.32
0.63	11.47134	36.64857	83.81932	18.48
0.64	11.4381	36.68045	82.07473	18.52
0.65	11.3665	36.32646	80.5632	18.45
0.66	11.32084	36.14212	78.9363	18.30
0.67	11.2515	35.81407	77.39082	18.07
0.68	11.16394	35.6258	75.75409	17.78
0.69	11.08449	35.26383	74.20755	17.43
0.7	10.96243	34.88367	72.66648	17.04
0.71	10.90977	34.5639	71.0599	16.61
0.72	10.8228	34.19329	69.47347	16.14
0.73	10.66671	33.73516	67.93448	15.66
0.74	10.55554	33.35472	66.31924	15.15
0.75	10.38607	32.88541	64.74636	14.64
0.76	10.25463	32.41373	63.14243	14.12
0.77	10.12453	31.82619	61.58069	13.62

0.78	9.995033	31.2859	59.96092	13.14
0.79	9.840901	30.80079	58.28048	12.69
0.8	9.624402	30.14067	56.68243	12.29
0.81	9.441134	29.45299	55.05526	11.95
0.82	9.213344	28.81481	53.36478	11.70
0.83	8.999686	28.07788	51.68371	11.56
0.84	8.799292	27.33697	49.95056	11.54
0.85	8.512277	26.57299	48.19093	11.66
0.86	8.34832	25.76901	46.36655	11.94
0.87	8.075273	24.90812	44.52608	12.38
0.88	7.792999	24.03262	42.61485	13.00
0.89	7.479096	22.98775	40.71872	13.79
0.9	7.184308	21.99851	38.6792	14.78
0.91	6.815784	20.97877	36.54842	15.94
0.92	6.477651	19.74423	34.39388	17.29
0.93	6.101027	18.58737	32.02412	18.84
0.94	5.679786	17.24173	29.55917	20.62
0.95	5.21002	15.74575	26.91796	22.66
0.96	4.664107	14.1277	23.99834	25.02
0.97	4.068547	12.2723	20.71174	27.82
0.98	3.332346	10.02567	16.87092	31.28
0.99	0	7.214404	12.06343	36.25
1.0	0	0	0.787416	47.73

4.9.1 Conclusion for Minimum THD for seven level CHB-MLI

From the above table a conclusion can be drawn, the least THD% can be seen between a modulation indices **M** = 0.83 to 0.84. In order to confirm whether any least THD can be obtain between these range, further work has been carried out. As a result, at MI=0.835 there is a minimum THD% = 11.53 is observed.

Table. 4.6: Switching angles obtained for minimum THD for Seven level CHB-MLI

M	a1	a2	a3	%THD
0.835	8.909635	27.71244	50.81891	11.53

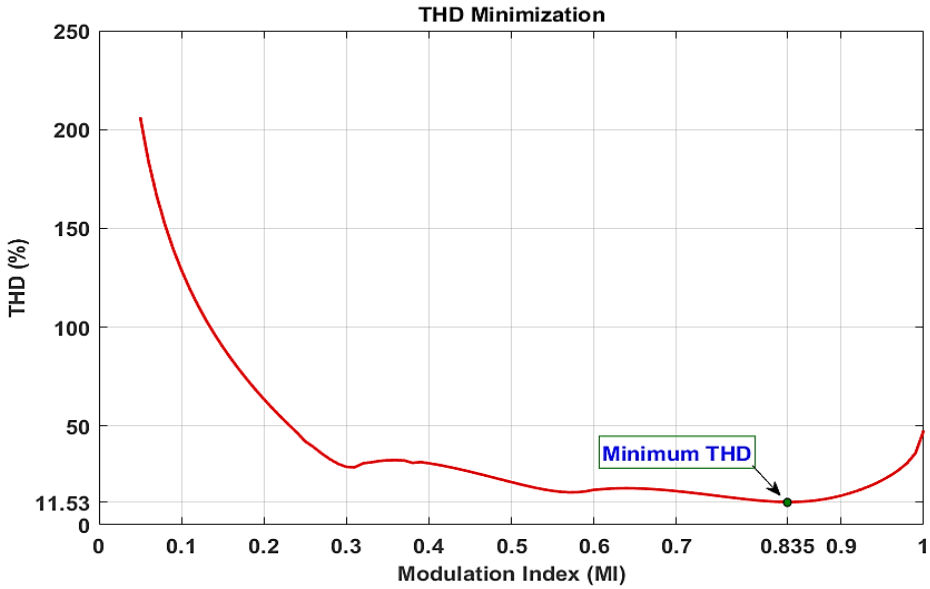

Fig: 4.4 Plot indicating minimum THD for seven level CHB MLI

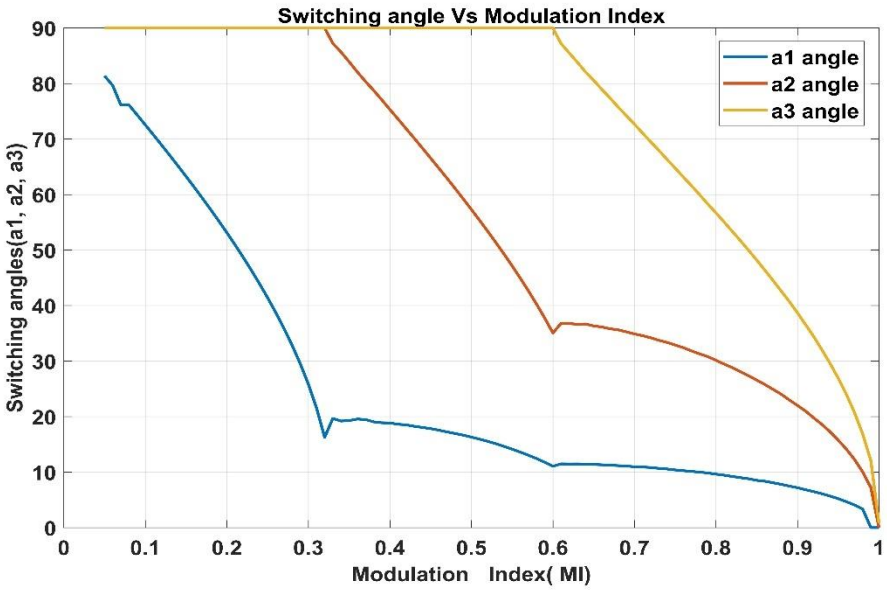

Fig: 4.5 Plot indicating switching angles vs modulation index for seven level CHB MLI

4.10. Optimized switching angles for THD minimization with 3rd harmonic elimination for seven level CHB-MLI:

The below table represents the results for THD minimization with 3rd harmonic elimination at different modulation indices.

Table 4.7: Switching angles obtained for THD minimization with 3rd Harmonic elimination

M	Switching angles for THD and 3rd harmonic			3rd Harmonic	%THD
	a1	a2	a3		
0.54	9.277848	50.72219	90	0	19.26
0.55	12.29364	47.70639	90	0	17.35
0.56	15.91784	44.08214	90	0.01	16.98
0.57	15.13051	43.43359	88.94028	0.01	17.52
0.58	14.82866	42.45787	87.96382	0	17.95
0.59	14.45863	41.53738	86.95337	0.01	18.25
0.6	13.05775	41.24016	85.76174	0.01	18.46
0.61	12.84536	40.23243	84.74458	0	18.57
0.62	12.5582	39.28264	83.6909	0	18.63
0.63	12.0138	38.48511	82.58053	0.01	18.62
0.64	11.63539	37.61074	81.4673	0.01	18.57
0.65	11.73565	36.51004	80.37779	0	18.46
0.66	11.2705	35.71927	79.19906	0.01	18.3
0.67	10.56393	35.06056	77.97118	0	18.11
0.68	10.3967	34.167	76.76097	0	17.88
0.69	10.14166	33.34478	75.5079	0	17.61
0.7	10.14906	32.4376	74.23626	0	17.31
0.71	9.201074	31.99563	72.85575	0	17.00
0.72	9.312855	31.13597	71.50403	0	16.62
0.73	9.358819	30.35959	70.0963	0.01	16.22
0.74	8.813931	29.90394	68.59571	0	15.79
0.75	9.230202	29.11321	67.08979	0	15.32
0.76	8.471727	28.92102	65.44137	0	14.82
0.77	8.98531	28.29633	63.78352	0	14.27
0.78	8.67244	28.16394	61.97656	0	13.71

0.79	8.532689	28.12248	60.05776	0	13.12
0.8	8.806809	28.10523	58.01441	0	12.54
0.81	9.241827	28.26704	55.78979	0	12.03
0.82	9.306484	28.95244	53.26315	0.01	11.71
0.83	9.881689	29.87232	50.3796	0.01	11.8

The below table represents the results for 3rd harmonic and 5th harmonic elimination at different modulation indices.

4.11. Optimized switching angles for Selective Harmonic Elimination for 3rd and 5th Harmonics for seven level CHB-MLI:

Table 4.8: Switching angles obtained for 3rd Harmonic and 5th harmonic elimination

MI	Switching angles for SHE only			3rd Harmonic	5th Harmonic	%THD
	a1	a2	a3			
0.57	11.71069	45.53883	88.25856	0.01	0.01	18.19
0.58	11.70937	44.32897	87.39382	0.01	0.01	18.38
0.59	11.80768	43.09246	86.50808	0.01	0	18.50
0.6	12.0126	41.82432	85.6008	0	0	18.57
0.61	12.33033	40.51801	84.67152	0.02	0	18.60
0.62	12.7673	39.16679	83.71848	0.01	0.01	18.63
0.63	13.33025	37.7589	82.74138	0	0	18.68
0.64	14.02942	36.27966	81.73856	0.01	0	18.81
0.65	14.85012	34.74231	80.69652	0.03	0.02	19.03
0.66	15.91972	32.99964	79.64894	0.01	0	19.47
0.67	17.21162	31.08475	78.55793	0.01	0	20.19
0.68	18.93461	28.78404	77.44202	0	0	21.46
0.69	22.45827	24.7019	76.26984	0	0	24.97
0.8	19.8975	20.48736	58.46931	0.2	0	19.57
0.81	11.42611	27.0987	55.96296	0	0.01	12.42

4.12. The Cumulative Distribution function (CDF)

The cumulative distribution function (CDF) describes the probability that a real valued random variable X with a given probability distribution will be found at a value less than or equal to x. In other words, it can be expressed by

$$\boldsymbol{CDF(x) = P(X < x)}$$

To evaluate the performance of the proposed DE algorithm in terms of convergence speed and its ability to reach global minima, the cumulative distribution function (CDF) is applied to the global minimum value in Table 4.8. The CDF is plotted for DE and is shown in fig 4.6

Table 4.9: Global minimum obtained by DE for various Modulation Indices

Modulation Index	Global Minimum
0.55	6.33E-17
0.56	7.22E-18
0.57	1.25E-17
0.58	6.66E-18
0.59	2.61E-17
0.6	5.38E-17
0.61	6.11E-18
0.62	4.23E-16
0.63	3.74E-14
0.64	6.66E-18
0.65	2.89E-17
0.66	3.22E-17
0.67	2.84E-15
0.68	3.66E-17
0.69	6.72E-16
0.81	1.40E-15

The switching angles and amount of global minimum are plotted with respect to various modulation indices with step size of 0.01 obtained using DE are shown.

The following is the CDF curve for DE algorithm for different modulation indices

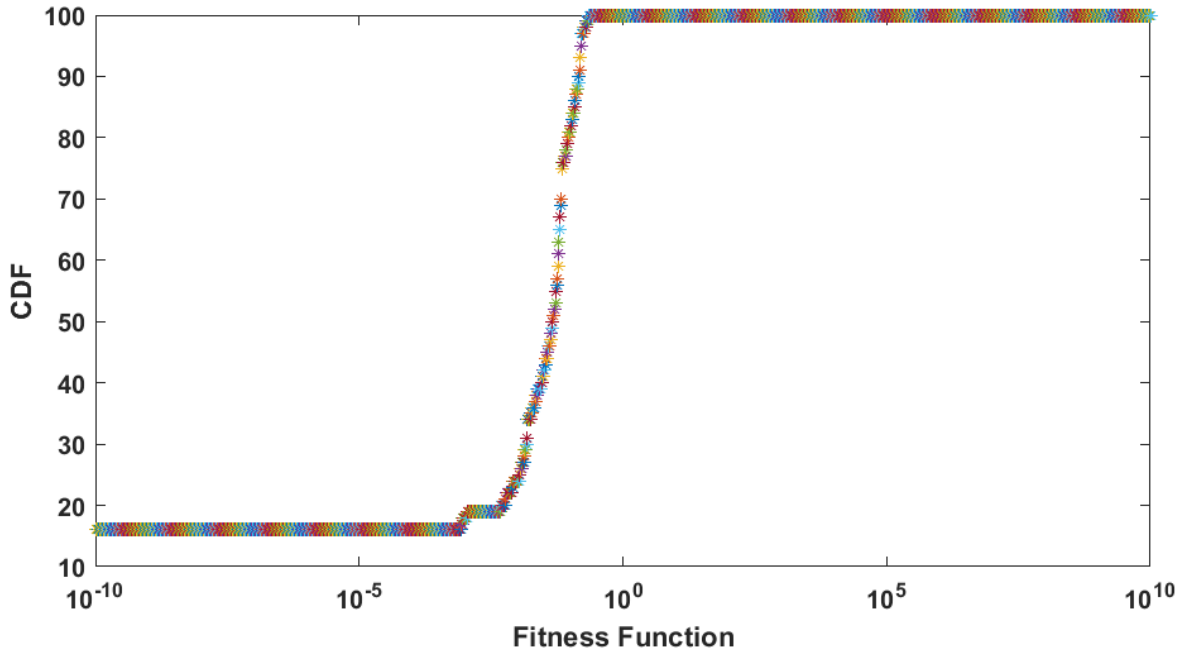

Fig 4.6 CDF curve of DE algorithm

Table 4.10: Computational Time of DE, ABC and PSO Algorithms

Algorithm Name	DE	ABC	PSO
Time (Sec)	70.873127	105.887236	92.812823

The computational time required for DE, ABC, PSO algorithms is tabulated in Table 4.9 for M =0.8 with system Specifications

- RAM: 8GB
- Processor: i5,11th Gen
- OS: Windows 11

CHAPTER 5

MATLAB / SIMULINK IMPLEMENTATION

5.1 Simulation of Seven-level CHB MLI

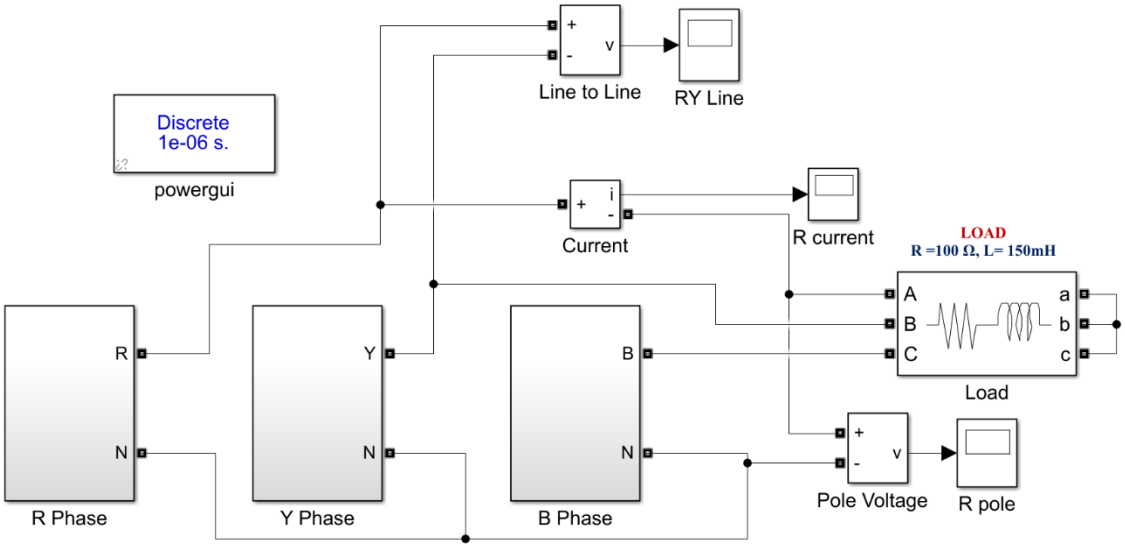

Fig. 5.1: SIMULINK main model of seven-level CHB MLI connected with RL load

The load RL (R = 100Ω, and L = 150 mH) is connected star connection. This CHB MLI is a symmetrical converter where all the DC sources (Vdc = 85.15 volts) are of same magnitude. In this 7 level CHB MLI, Three H-bridges are cascaded together to make a output waveform of seven levels (3Vdc, 2Vdc, Vdc, 0, -Vdc, -2Vdc, -3Vdc).

The voltage across one phase and the common N point is a phase voltage. Also, a pole voltage in the case of CHB inverter. And the voltage between any two phases is considered as line voltage (RY, YB and BR).

The configuration of cascading to three H-bridges are shown below in the following figure Fig. 5.2.

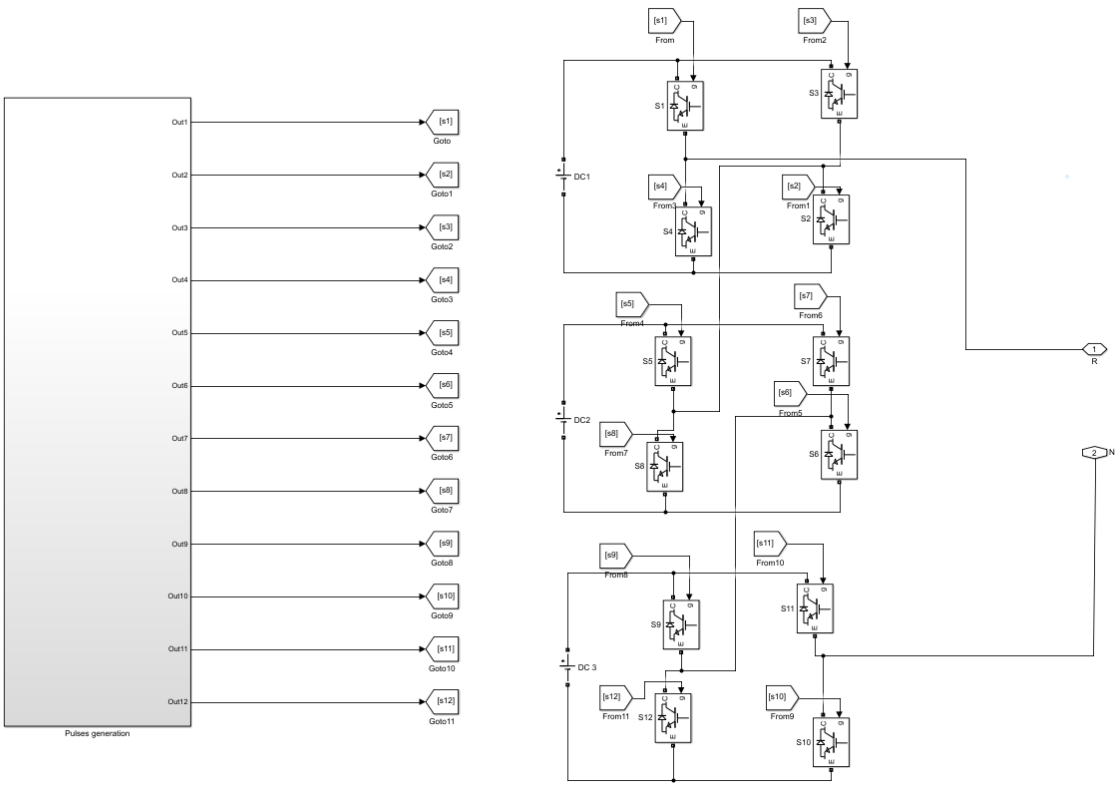

Fig 5.2: Three H-bridges cascaded to form a seven level CHB MLI

The required PWM pulses for firing IGBT switches are generated by the following logic shown below in Fig. 5.3

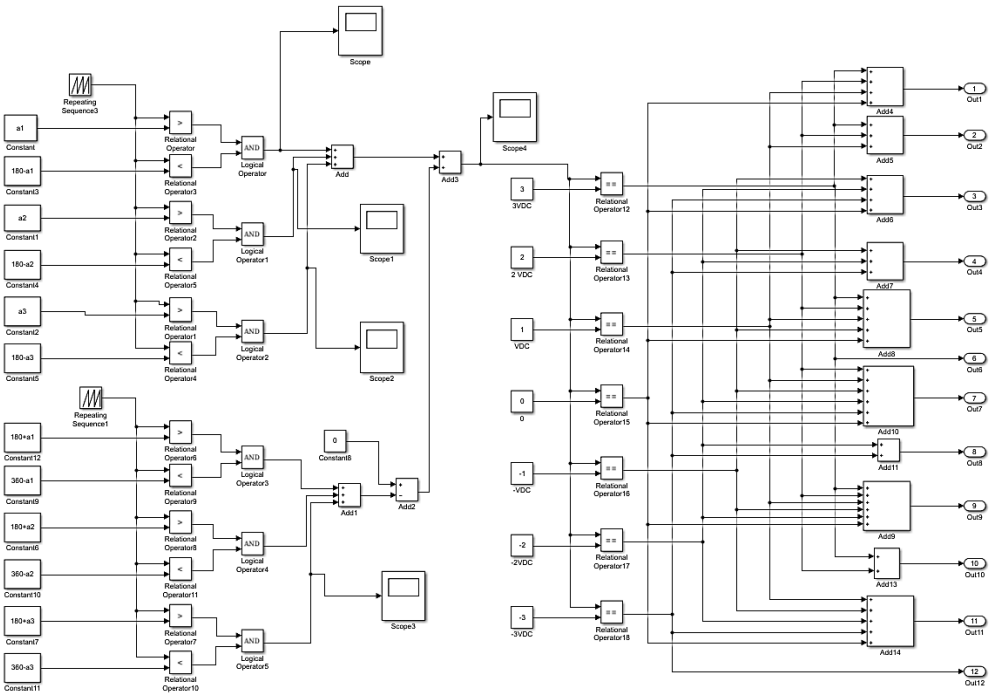

Fig. 5.3: PWM pulse generation logic for seven level CHB MLI

The pole voltage, line voltage and current waveforms obtained by the simulation of seven-level CHB MLI are shown in the following figures. (Fig. 5.4, Fig. 5.5 & Fig. 5.6)

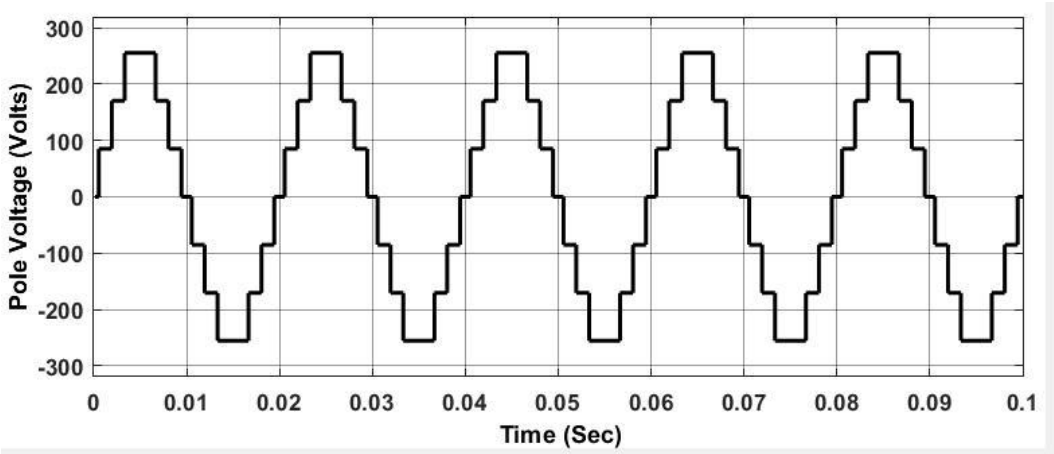

Fig. 5.4: Output pole voltage of three phase seven level CHB MLI

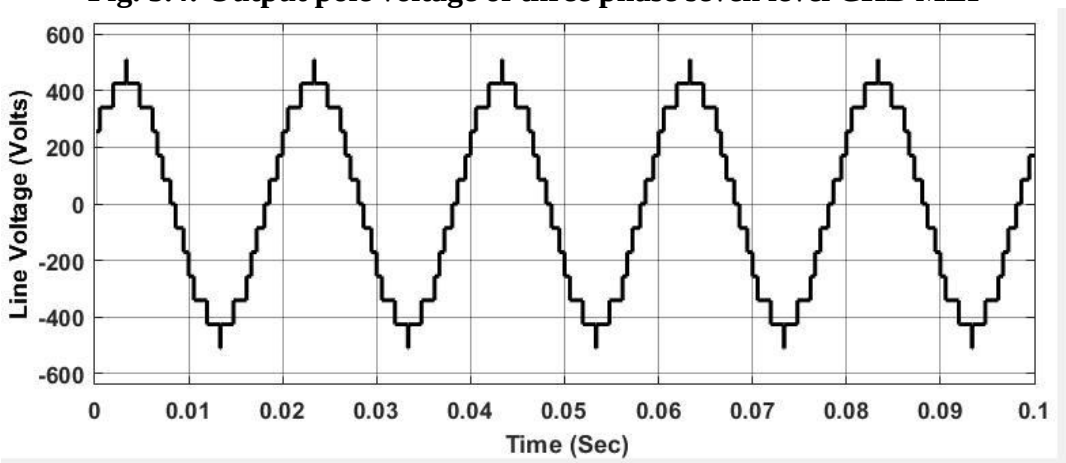

Fig. 5.5: Output Line voltage of three phase seven level CHB MLI

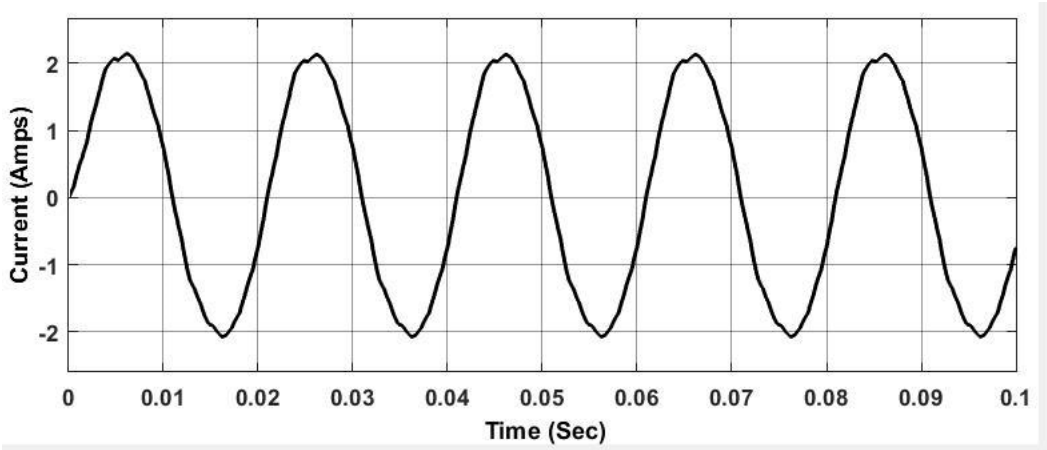

Fig. 5.6: Output Current Waveform of seven level CHB MLI for R-Phase

For hardware implementation, instead of implementing with 3-phase seven level CHB, experimental results were considered only for Single -Phase seven level CHB, due to unavailability of more number of CHB. Two different modulation Index are considered for comparison purpose.

Case 1: MI = 0.57

MI	Technique	Firing angles	Harmonics		V Fund (RMS)	V Fund (Peak)	Voltage THD %
			3th %	5th %			
0.57	THD	a1 = 12.6687 a2 = 41.8952 a3 = 90	3.97	4.90	131.9	186.5	16.44
	THD+3rd	a1 = 14.8322 a2 = 43.2396 a3 = 88.5781	0	4.79	131.8	186.4	17.67
	SHE	a1 = 11.7106 a2 = 45.5388 a3 = 88.2585	0.01	0.01	131.1	185.9	18.19

Table. 5.1: Results of 7-level CHB MLI at Modulation Index = 0.57

Case 2: MI =0.8

MI	Technique	Firing angles	Harmonics		V fun (RMS)	V fun (Peak)	Voltage THD %
			3th %	5th %			
0.8	THD	a1 = 9.624402 a2 = 30.14067 a3 = 56.68243	1.62	0.24	184	260.2	12.29
	THD +3rd	a1 = 8.777223 a2 = 28.11867 a3 = 58.01233	0	2.42	184	260.2	12.54
	THD and 3rd+5th	a1 = 14.03267 a2 = 26.29637 a3 = 57.16942	0.8	0.01	184	260.2	13.83
	SHE (3rd +5th)	a1 = 19.89750 a2 = 20.48736 a3 = 58.46931	0.2	0	184	260.2	19.57

Table. 5.2: Results of 7-level CHB MLI at Modulation Index = 0.8

5.2 Simulation Results of Seven level CHB MLI

Pole voltage at 0.57

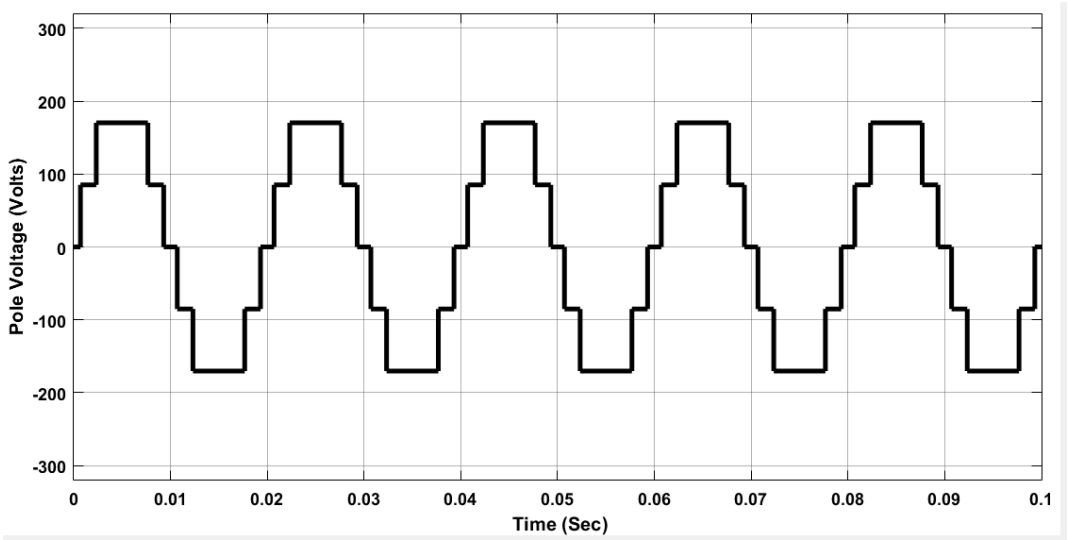

Fig. 5.7: Output pole voltage of seven level CHB MLI at MI =0.57

Pole voltage at 0.8

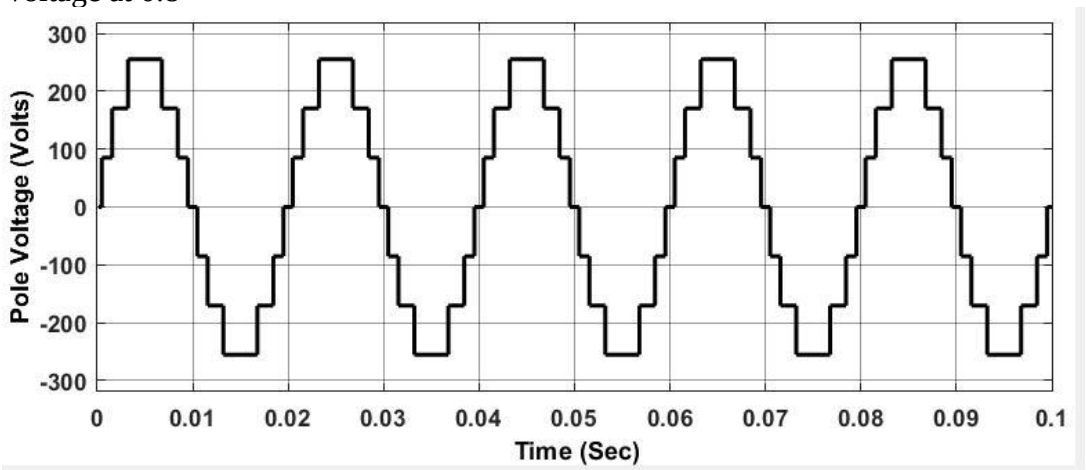

Fig. 5.8: Output pole voltage of seven level CHB MLI at MI =0.8

When a comparison of pole voltage is made with a modulation index of 0.57 and 0.8, one level at MI = 0.57 is not visible at the output waveform, as one of the switching angles reaches to 90^0, there is no active working of one CHB which can be observed from MI ranges from 0 to 0.6. Similar results of the output waveform can be seen with WAVECT controller and Power Analyzer in the following results.

5.3 Implementation of Seven level CHB with WAVECT Controller:

WAVECT library will enable the interfacing of the Matlab algorithm with the hardware and software. WAVECT blockset is available as a separate library in the simulink library browser. Wavect block has to be used for every WAVECT based design. It is used for configuring our interfaces and building our design.

In practical implementation, the setup needs a controller to generate the PWM pulses to operate the real time IGBT switches. We have a WAVECT controller which is a FPGA based controller.

WAVECT Controller is a compact, versatile real time control prototyping system. Comprising of high-end FPGA for fast computing and IO, dual core processor for control and communication, scalable embedded voltage and current sensors, large number of PWM outputs and high speed IO's, it is designed to address today's complex problems. Coupled with an easy and powerful model- based development environment, push button device binary and configuration generation and a dedicated instrumentation software, it forms a complete control prototyping solution. WAVECT operating frequency is 40MHz.

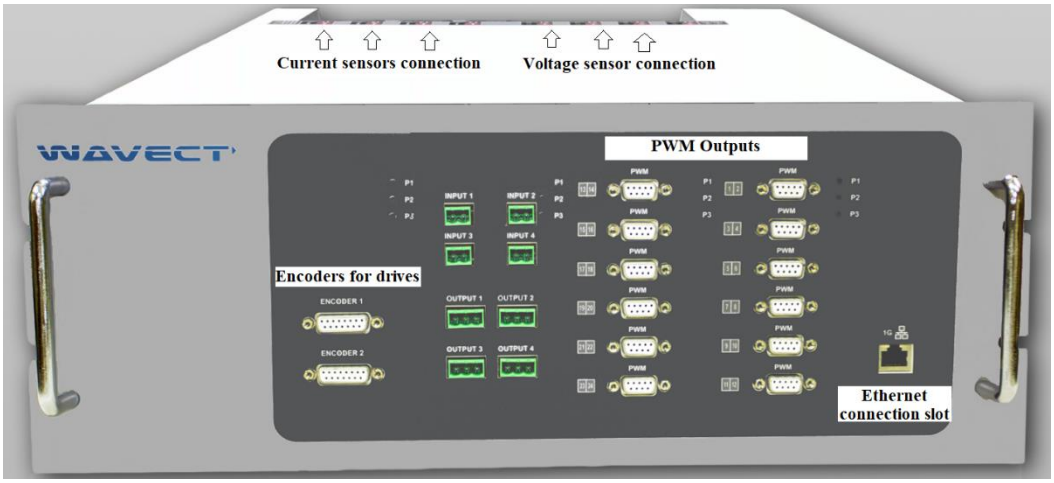

Fig. 5.9: WAVECT Controller

Here in WAVECT there are 24 PWM Outs (12 * 2= 24). In order to perform three phase seven level CHB there is a requirement of 36 PWM outs are required. Due to unavailability of PWM output only Single phase seven level CHB is performed.

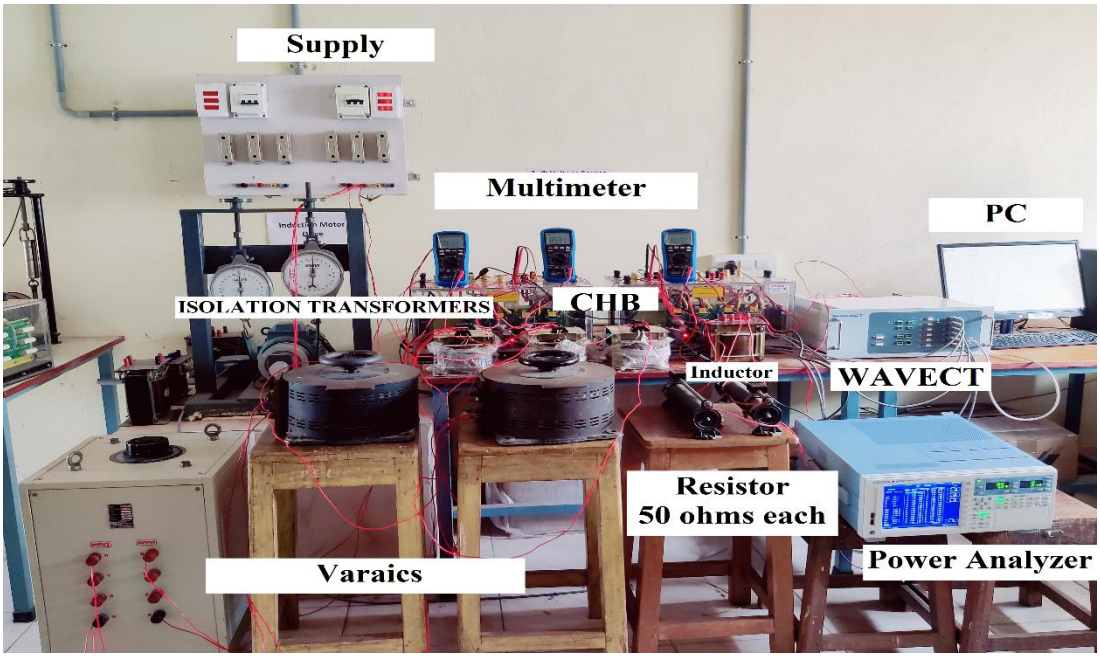

Fig 5.10 Experimental setup for seven level CHB MLI on WAVECT controller

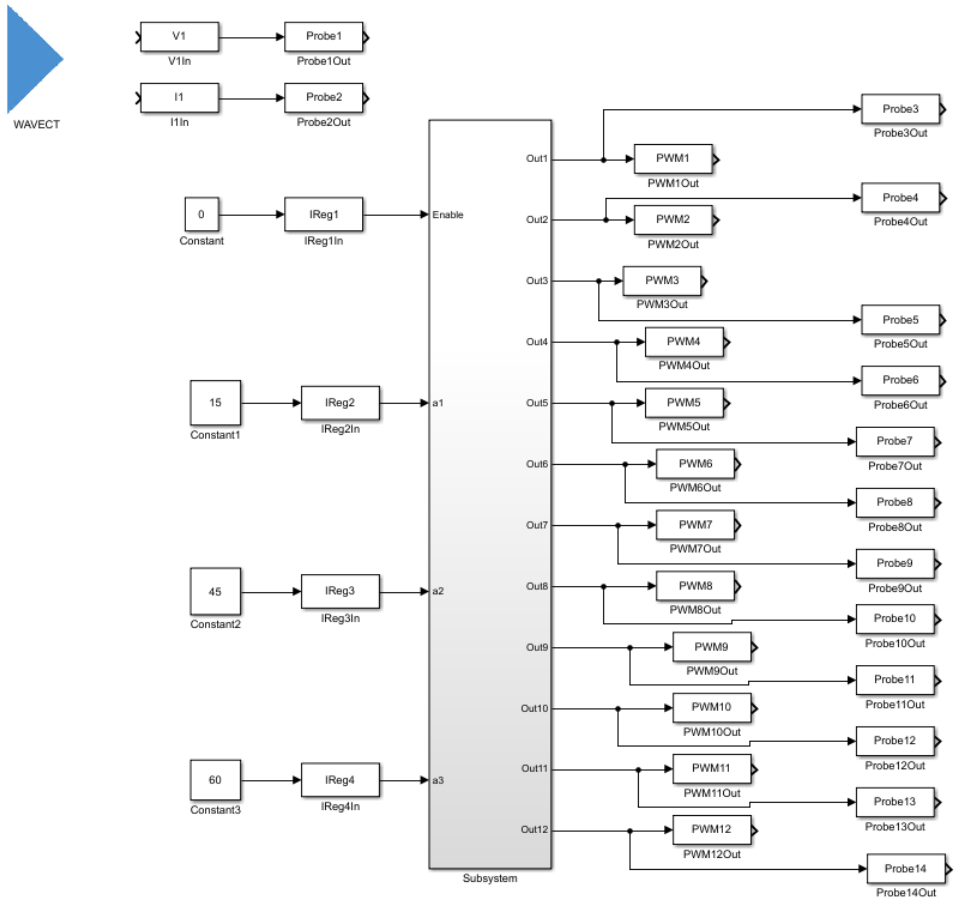

Fig 5.11 WAVECT bin model for Seven level CHB to get the PWM pulses

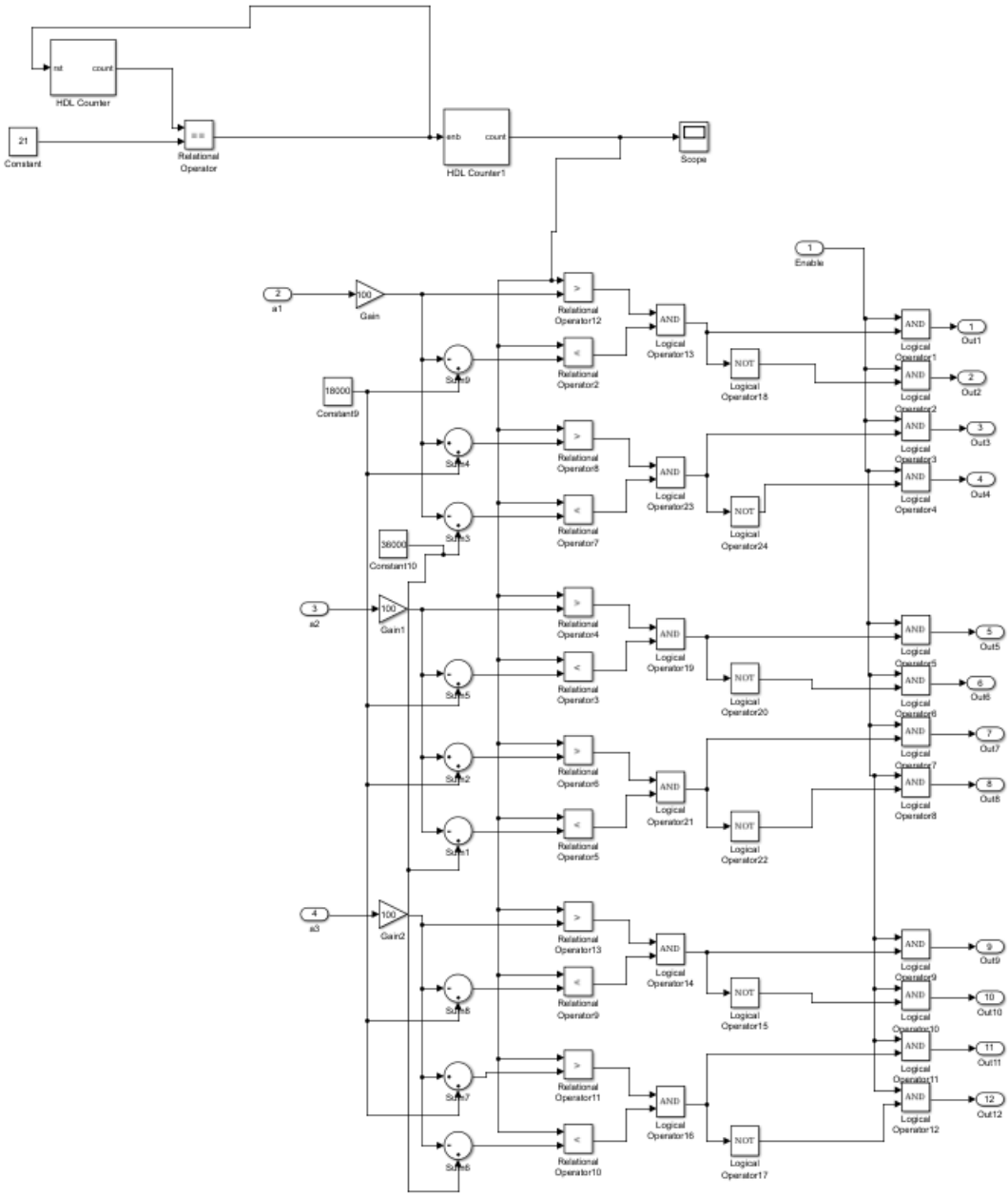

Fig. 5.12: Pulses subsystem for Seven level CHB for PWM outs

Case 1: MI = 0.57

MI	Technique	Firing angles	Harmonics		VFund (RMS)	Voltage THD %
			3th %	5th %		
0.57	THD	a1 = 12.6687 a2 = 41.8952 a3 = 90	5.25	7.27	131.2	15.64
	THD+3rd	a1 = 14.8322 a2 = 43.2396 a3 = 88.5781	0.2	6.95	131.0	16.10
	SHE	a1 = 11.7106 a2 = 45.5388 a3 = 88.2585	0.95	0.52	131.0	16.30

Table. 5.3: Results of 7-level CHB MLI at Modulation Index = 0.57 with WAVECT

Case 2: MI =0.8

MI	Technique	Firing angles	Harmonics		V fund (RMS)	Voltage THD %
			3th %	5th %		
0.8	THD	a1 = 9.624402 a2 = 30.14067 a3 = 56.68243	2.74	0.45	184.0	11.01
	THD +3rd	a1 = 8.777223 a2 = 28.11867 a3 = 58.01233	0.41	4.08	184.0	11.25
	THD and 3rd+5th	a1 = 14.03267 a2 = 26.29637 a3 = 57.16942	0.49	0.5	184.6	12.70
	SHE (3rd +5th)	a1 = 19.89750 a2 = 20.48736 a3 = 58.46931	0.6	0.53	183.98	18.58

Table. 5.4: Results of 7-level CHB MLI at Modulation Index = 0.8 With WAVECT

5.4. Results of Seven level CHB -MLI on WAVECT controller

MI =0.57

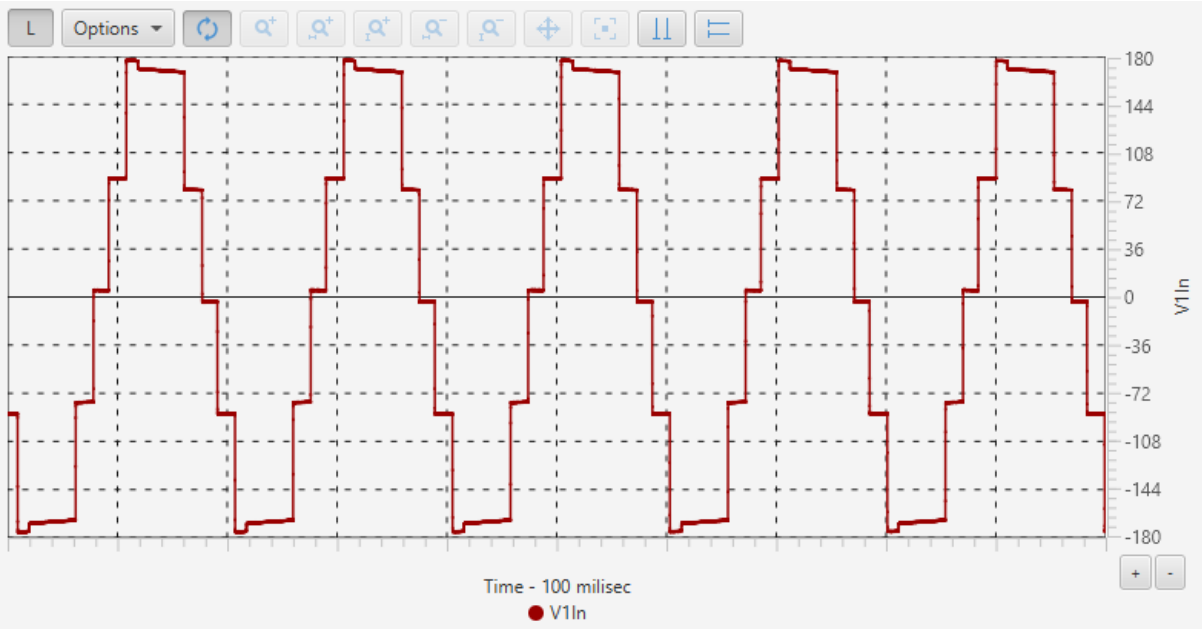

Fig. 5.13: Output Pole Voltage of Seven level CHB MLI at MI = 0.57 with WAVECT

MI = 0.8

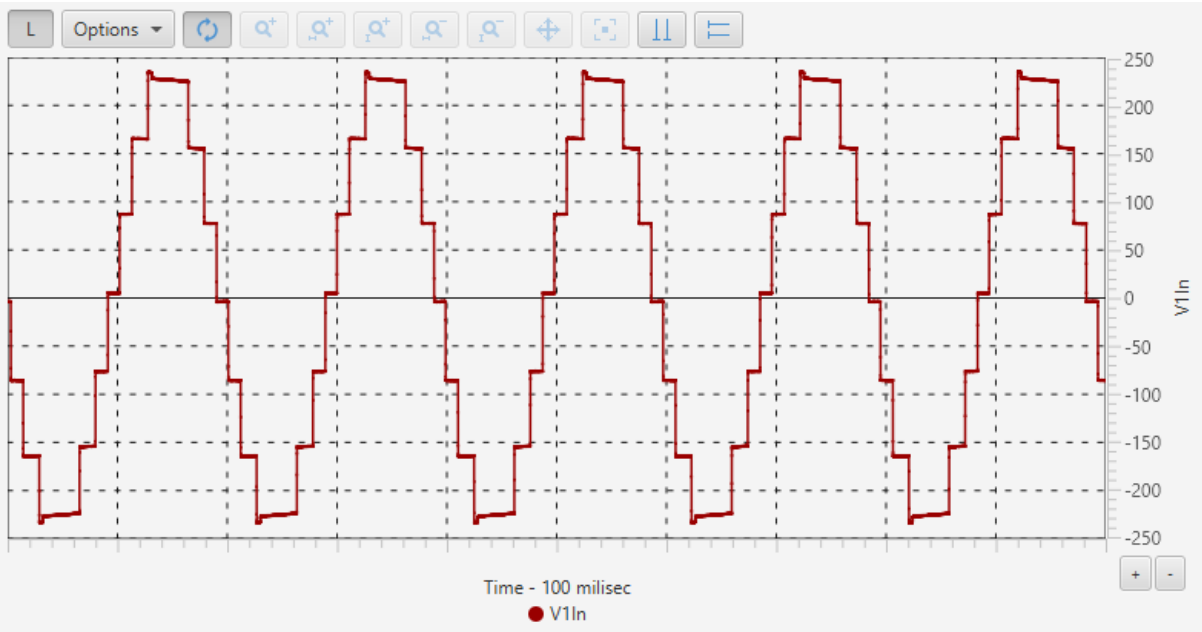

Fig. 5.14: Output Pole Voltage of Seven level CHB MLI at MI =0.8 with WAVECT

MI = 0.57

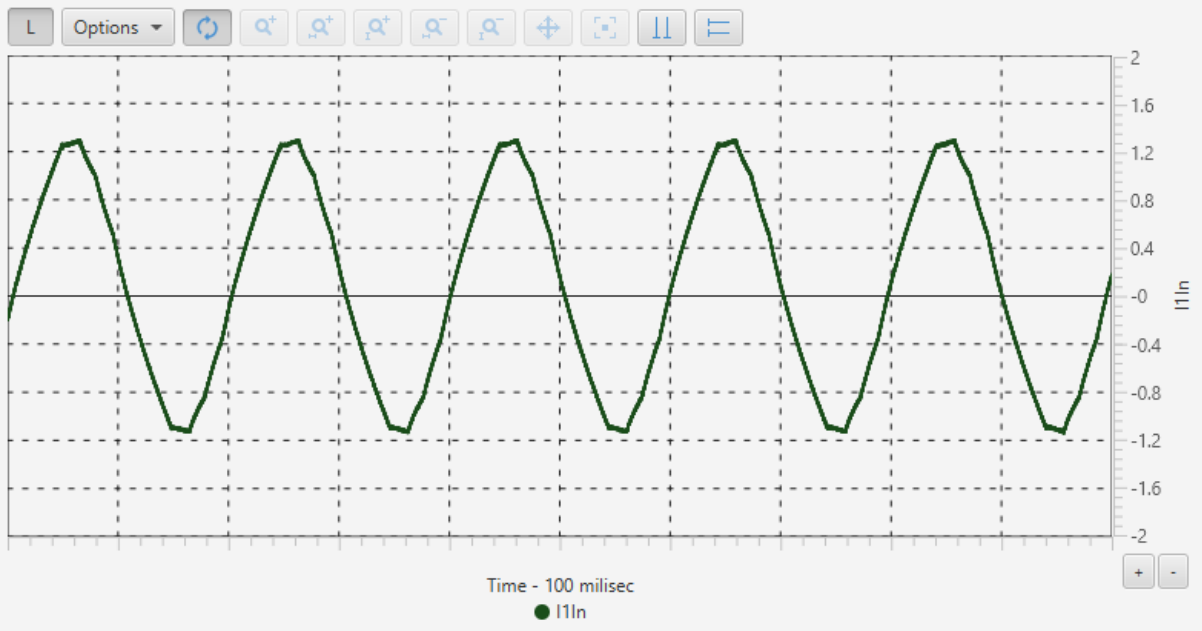

Fig. 5.15: Output Current waveform of Seven level CHB MLI at MI = 0.57 with WAVECT

MI =0.8

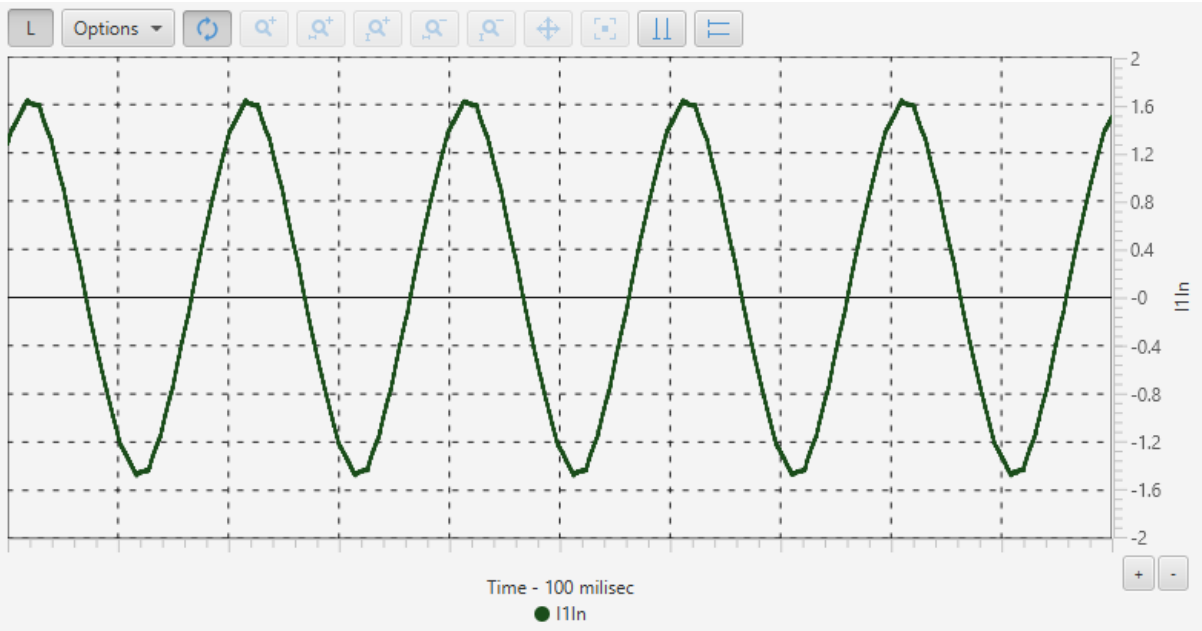

Fig. 5.16: Output Current waveform of Seven level CHB MLI at MI = 0.57 with WAVECT

5.5 Implementation of seven level CHB with WT1800E High-Performance Power Analyzer

Yokogawa's Power Analyzer software manages numeric, waveform, and harmonic data measurements. It enables data logging and instrument configuration from your computer.

The WT1800E is a high-performance power analyzer that guarantees power accuracy of 0.05% of reading plus 0.05% of range. It is capable of harmonics analysis up to the 500th order of a 50/60 Hz fundamental frequency. With up to 6 input channels, a wide range of display and analysis features, and PC connectivity, the WT1800E is the ideal tool for engineers to accurately measure power characteristics and efficiency of electrical devices.

Fig. 5.17: Power Analyzer

Case 1: MI = 0.57

MI	Technique	Firing angles	Harmonics		VFund (RMS)	Voltage THD %
			3th %	5th %		
0.57	THD	a1 = 12.6687 a2 = 41.8952 a3 = 90	5.19	6.85	131.8	16.21
	THD+3rd	a1 = 14.8322 a2 = 43.2396 a3 = 88.5781	0.83	6.91	131.9	17.13
	SHE	a1 = 11.7106 a2 = 45.5388 a3 = 88.2585	0.87	0.45	131.9	17.57

Table. 5.5: Results of 7-level CHB MLI at Modulation Index = 0.57 with Power

Analyzer

Case 2: MI =0.8

MI	Technique	Firing angles	Harmonics		V fund (RMS)	Voltage THD %
			3th %	5th %		
0.8	THD	a1 = 14.83221 a2 = 43.2369 a3 = 88.57812	2.56	0.46	184.06	11.73
	THD +3rd	a1 = 8.777223 a2 = 28.11867 a3 = 58.01233	0.84	3.98	184.72	11.88
	THD and 3rd+5th	a1 = 14.03267 a2 = 26.29637 a3 = 57.16942	0.99	0.8	183.98	13.30
	SHE (3rd +5th)	a1 = 19.8975 a2 = 20.48736 a3 = 58.46931	0.29	0.61	184.2	18.97

Table. 5.6: Results of 7-level CHB MLI at Modulation Index = 0.8 with Power Analyzer

5.6. Results of Seven level CHB-MLI on WAVECT Controller

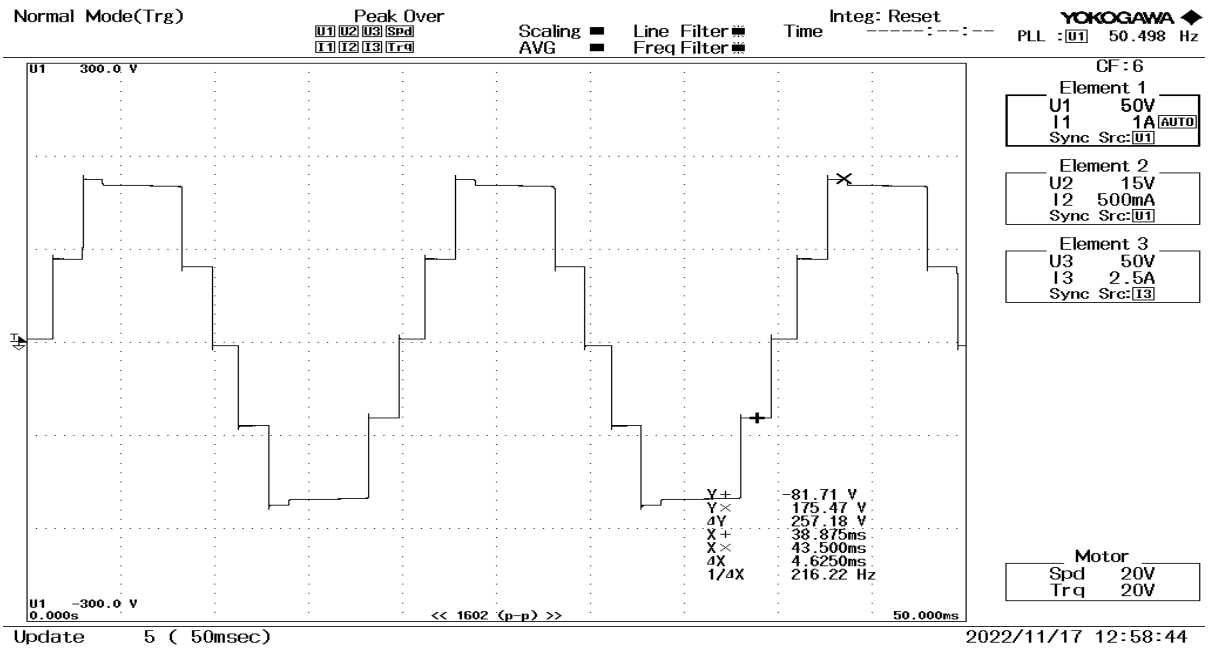

Fig. 5.18: Output Pole Voltage of Seven level CHB MLI at MI = 0.57 in power analyzer

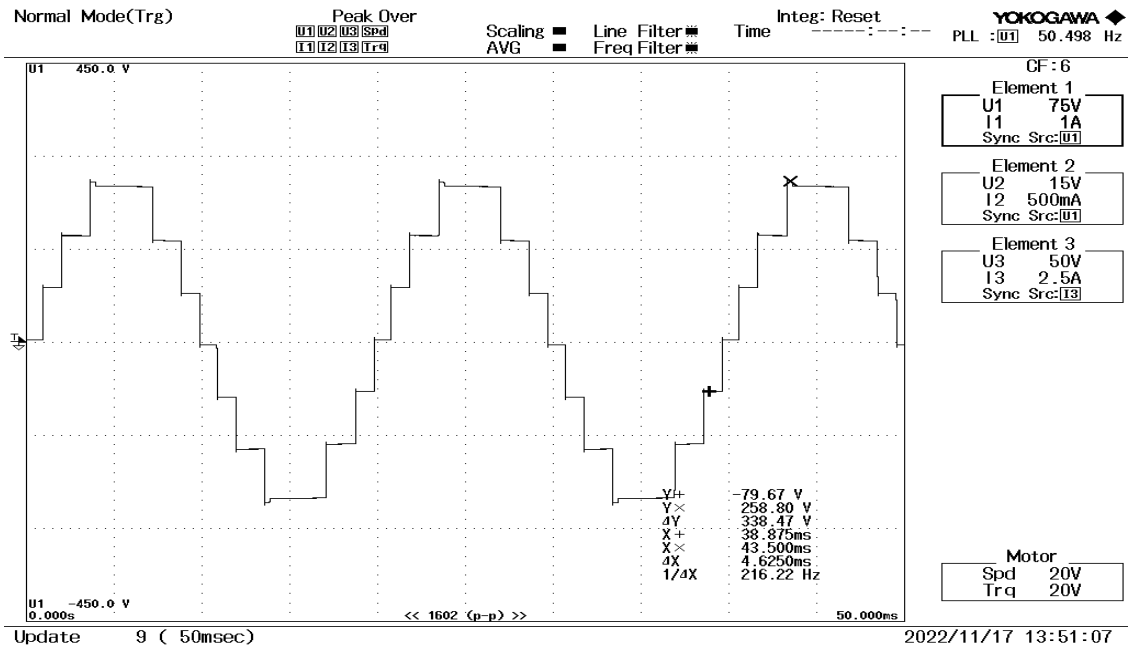

Fig. 5.19: Output Pole voltage waveform of Seven level CHB MLI at MI = 0.8 in Power analyzer

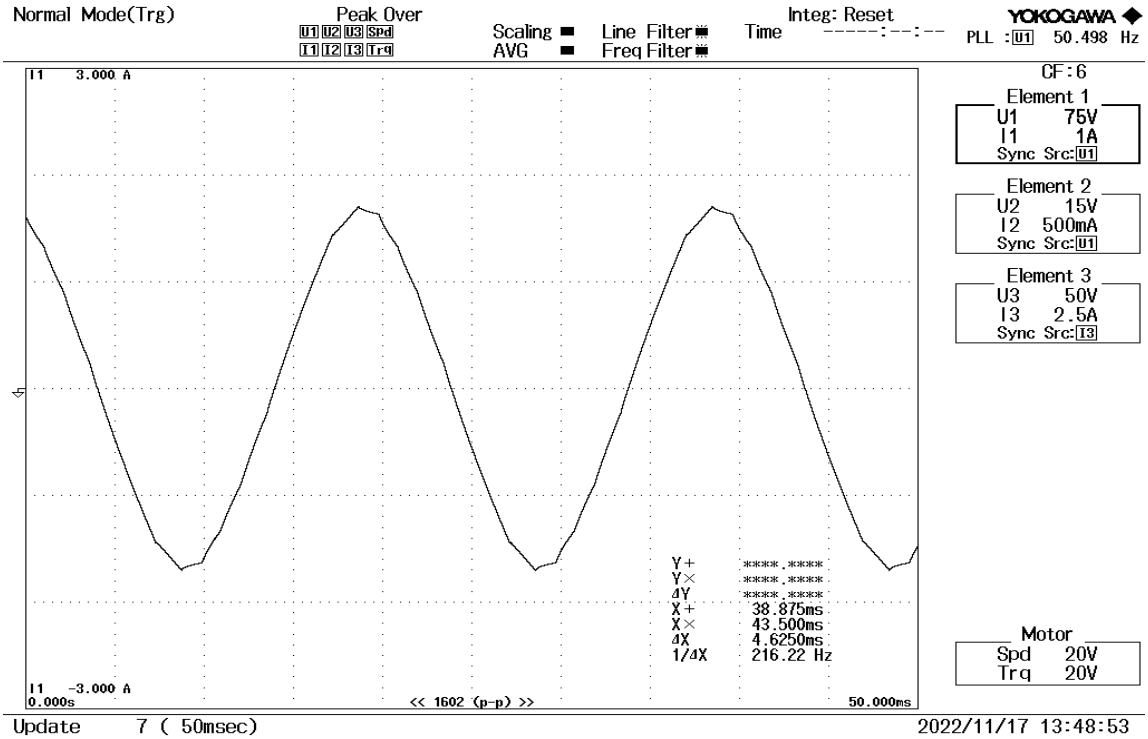

Fig. 5.20: Output Current waveform of Seven level CHB MLI in Power analyzer

Table.5.7: Simultaneous SHE and minimal THD problem for a seven-level three-angle inverter

Technique	Harmonic Number											THD %
	1	3	5	7	9	11	13	15	17	19	21	
THD	0.57	3.96	4.89	3.47	3.56	5.01	8.76	3.93	0.61	0.77	2.79	16.43
	0.8	1.62	0.24	1.95	3.64	1.88	3.95	4.16	5.61	1.85	2.43	12.29
THD+SHE	0.57	0	4.79	1.07	2.61	8.77	7.09	3.01	3.65	1.37	0.47	17.67
	0.8	0	2.42	1.28	4.86	2.50	4.54	2.94	3.43	2.28	4.71	12.54
SHE	0.57	0.01	0.01	5.69	4.22	9.19	5.03	2.49	0.46	6.47	1.03	18.19
	0.8	0.19	0.01	5.41	3.75	4.75	1.61	0.45	4.85	5.89	0.06	18.58

A comparison of switching angles and voltage THD for pure SHE, minimal voltage THD and combined SHE with eliminated 3rd harmonic and minimal THD is given in figure 5.21 respectively. Minimal THD and combined SHE / minimal THD solutions are given for the modulation index interval where the solutions for SHE problem exist. It is readily seen from table 5.5 and fig 5.21 that the combined SHE / minimal THD is always in-between pure SHE and minimal THD.

The solutions generated by SHE, minimal THD and combined SHE / minimal THD solutions are compared in Table 5.5 for modulation indices MI=0.57 and MI=0.80.

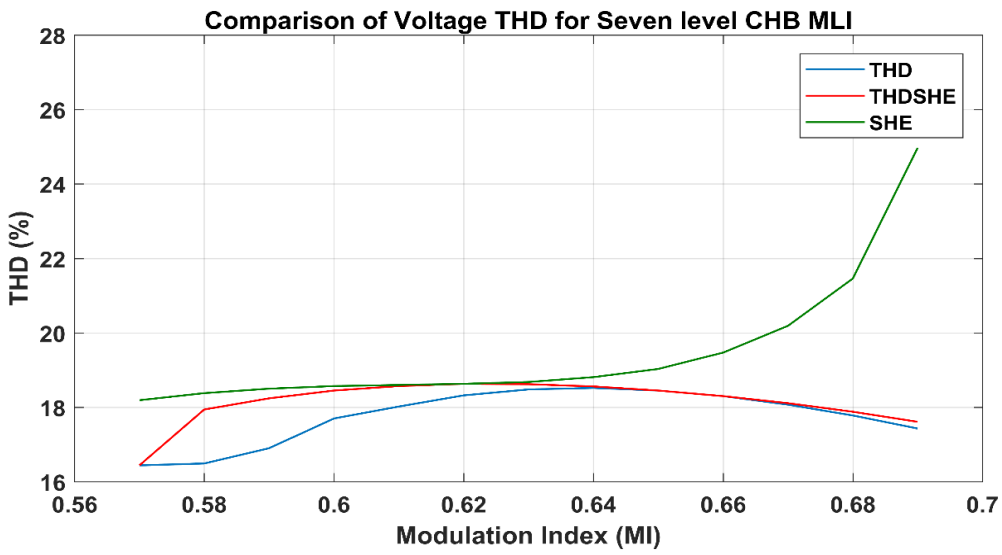

Fig: 5.21 Comparison of voltage THD for a seven-level single-phase CHB MLI for minimal THD, pure SHE, and simultaneous SHE and THD minimization

CHAPTER: 6

Conclusion

In conventional topologies of MLI (flying capacitor, diode clamped, and cascaded H-bridge), CHB requires the least number of components among these three multilevel inverters to achieve the same number of voltage levels. SHE-PWM and THD are techniques to reduce some of the lower order harmonics present in the waveforms.

Meta-heuristic algorithms are used to find optimal switching angles (three angles) of SHE-PWM which results in reduction of undesirable lower order harmonics (3rd and 5th) from the output voltage of seven level CHB-MLI. To evaluate the performance of algorithms in terms of convergence speed and their ability to reach global minima for different modulation indices, the cumulative distribution function (CDF) is applied to the global minimum values obtained. Results show that DE algorithm is highly efficient, accurate and has a maximum probability of finding the global minima solutions.

DE algorithm is applied to obtain three switching angles of SHE-PWM for seven level CHB to eliminate lower order harmonics. SHE-PWM resulted in reducing selective lower order harmonics and controlling the fundamental voltage over wide range of modulation indices. But with SHE-PWM other lower order harmonic magnitudes are significant resulting in slightly more THD. Similarly, when THD minimization is applied to seven level CHB there is a reduction of harmonic content, but the dominant lower order harmonics are not eliminated, as a result there is a necessity to use filter circuit, which in turn increases cost.

To overcome the drawbacks of individual techniques, they are combined so that both lower order harmonics get eliminated and THD gets minimized.

Results obtained with simulation are validated by hardware implementation of SHE-PWM and THD minimization techniques for seven level CHB inverter.

References

[1] J. Rodriguez, Jih-Sheng Lai and Fang Zheng Peng, "Multilevel inverters: a survey of topologies, controls, and applications," in IEEE Transactions on Industrial Electronics, vol. 49, no. 4, pp. 724-738, Aug. 2002, doi: 10.1109/TIE.2002.801052.

[2] M. Malinowski, K. Gopal Kumar, J. Rodriguez and M. A. Pérez, "A Survey on Cascaded Multilevel Inverters," in IEEE Transactions on Industrial Electronics, vol. 57, no. 7, pp. 2197-2206, July 2010, doi: 10.1109/TIE.2009.2030767.

[3] Memon, Mudasir & Mekhilef, Saad & Mubin, Marizan (2018). Selective Harmonic Elimination in Multilevel Inverter using Hybrid APSO algorithm. IET Power Electronics .11.10.1049/iet-pel.2017.0486

[4] Kundu, Sourabh, et al. "Comparative study between different optimisation techniques for finding precise switching angle for SHE-PWM of three-phase seven-level cascaded H-bridge inverter." *IET Power Electronics* 11.3 (2018): 600-609.

[5] A. L. Kouzou, A. Krama, S. S. Refaat and H. Abu-Rub, "Selective Harmonic Elimination PWM For a Cascaded Multi-level Inverter," 2020 IEEE International Conference on Industrial Technology (ICIT), 2020, pp. 1145-1150, doi: 10.1109/ICIT45562.2020.9067207.

[6] Z. Michalewicz and M. Michalewicz, "Evolutionary computation techniques and their applications," *1997 IEEE International Conference on Intelligent Processing Systems (Cat. No.97TH8335)*, 1997, pp. 14-25 vol.1, doi: 10.1109/ICIPS.1997.672732.

[7] Shi, Yuhui. "Particle swarm optimization: developments, applications and resources." Proceedings of the 2001 congress on evolutionary computation (IEEE Cat. No. 01TH8546). Vol. 1. IEEE, 2001.

[8] Galletly, J. (1998), "Evolutionary Algorithms in Theory and Practice: Evolution Strategies, Evolutionary Programming, Genetic Algorithms", Kybernetes, Vol. 27 No. 8, pp. 979-980. https://doi.org/10.1108/k.1998.27.8.979.4

[9] Karaboga, Dervis. "Artificial bee colony algorithm." scholarpedia 5.3 (2010): 6915.

[10] M. Srndovic, Y. L. Familiant, G. Grandi, and A. Ruderman, “Time domain minimization of voltage and current total harmonic distortion for a single-phase multilevel inverter with a staircase modulation,” Energies, vol. 9, no. 10, p. 815, 2016.

[11] N. Yousefpoor, S.H. Fathi, N. Farokhnia and H.A. Abyaneh, “Application of OMTHD on the Line Voltage of Cascaded Multi-Level Inverters with Adjustable DC Sources”, 2010 5th IEEE Conference on Industrial Electronics and Applications

[12] M. S. A. Dahidah, G. Konstantinou, and V.G. Agelidis, "A review of multilevel selective harmonic elimination PWM: formulations, solving algorithms, implementation and applications," IEEE Trans. Power Electron., vol. 30, no. 8, pp. 4091-4106, Aug. 2015.

[13] B. Diong, "THD-optimal staircase modulation of single-phase multilevel inverters," 2006 IEEE Region 5 Conference, San Antonio, TX, USA, 2006, pp. 275-279.

[14] C.A.L. Espinosa, I. Portocarrero, and M. Izquierdo, "Minimization of THD and angles calculation for multilevel inverters," Int. Journal of Eng. and Technology IJET-IJENS, vol. 12, no. 5, pp. 83-86, Oct. 2012.

[15] F. L. Luo, "Investigation on best switching angles to obtain lowest THD for multilevel DC/AC inverters," Proc. Int. 8th IEEE Conf. on Ind. Electron. and Appl., Melbourne, VIC, 2013, pp.1814-1818.

[16] K. Koishybay, Y.L. Familiant, and A. Ruderman, "Minimization of Voltage and Current Total Harmonic Distortion for a Single-Phase Multilevel Inverter Staircase Modulation," Proc. 9th Int. Conf. on Power Electronics (ICPE – ECCE Asia), Seoul, 2015, pp. 1203-1208.

[17] K. Koishybay, T. Alizadeh, Y. L. Familiant and A. Ruderman, "Simultaneous total harmonic distortion minimization and selective harmonic elimination: Combining the best of both worlds," 2016 IEEE International Power Electronics and Motion Control Conference (PEMC), Varna, Sept. 2016, pp. 203-208.

[18] Javad Olamaei & Masoumeh karimi (2017): THD Minimization in Multilevel Inverters using Teaching-Learning-Based Optimization Algorithm, International Journal of Ambient Energy, DOI: 10.1080/01430750.2017.1298057

APPENDIX

A. CDF CODE FOR PERFORMANCE ANALYSIS OF ALGORITHMS

```
for j=-10:0.001:10
   cdf=0
   for i=1:100
      if(total(i,5)<=(10^(j)))
         cdf = cdf+1;


      end
   end
   plot((10^(j)),cdf,'*')
   hold on
end
```

B. PSO CODE FOR OPTIMIZATION NON-LINEAR

```
clc            %clears the command window
clear all      % clears the previous work space
close all      % closes the previous graphical objects(figures)

m=2.19;        %M=0.57

*******************************************************************
Constrained function with equality and inequality contraints
fun=@(x)(9-((2/pi)*(x(1)+(3*x(2))+(5*x(3))))-(1/m^2));
%% Switching angle contraints
constraints=@(x)[x(1)-abs((asin(1/m)));
              -abs(asin(2/m))+x(2);
              abs(asin(2/m))-x(3);];

%% Fundamental, 3rd and 5th Harmonics
constraints_eq=@(x)[((cos(x(1))+cos(x(2))+cos(x(3)))*(4/pi))-
(m);(cos(3*x(1))+cos(3*x(2))+cos(3*x(3)));(cos(5*x(1))+cos(5*x(2))+cos(5*x(3)));];
```

```
%% Parameters Specifications
nvars=3;                    % number of variables to be optimized
LB = [0 0 0] ;                % Lower Bound
UB = [pi/2 pi/2 pi/2] ;         % Upper Bound
Npop = 100 ;                  % Population Size
max_iter=1000;                % Number of Iterations
[Xmin,Fmin]=PSO_non_linear_constraint(fun,constraints,constraints_eq,LB,UB,nvars,Npop,
max_iter);
a1=((Xmin(1)))*(180/pi)
a2=((Xmin(2)))*(180/pi)
a3=((Xmin(3)))*(180/pi)


%% Non-linear Inequality and equality constrained PSO
function
[Xmin,Fmin,SUM_Constraints]=PSO_non_linear_constraint(objective_function,constraints,c
onstraints_eq,LB,UB,nvars,Npop,max_it)
%%
% Objective_function          function to be optimized
% nvars                        number of variables to be optimized
% npop                         number of populations
% LB                           Lower bounds of the problem
% UB                           Upper bounds of the problem
% max_it                       Maximum iterations
% constraints                  Non-linear or linear inequality constraints
% constraints_eq                Non-linear or linear equality constraints
%%
format long
   w=5;
   c1=2;
   c2=2;
   alpha=0.75;
```

```
epss=1e-6;


for i=1:Npop
    pop(i).position=LB+(UB-LB).*rand(1,nvars);
    pop(i).cost=objective_function(pop(i).position);
    c = [constraints(pop(i).position);
         abs(constraints_eq(pop(i).position));];
    pop(i).const=sum(c(c>epss));
    pop(i).velocity=zeros(1,nvars);
end

%----------------Sort to selection the global best and local best for 1st iteration ----------------%
X_Minus=[];
aa=[pop.const];
COST_MINUS=[pop(aa<=epss).cost];
if ~isempty(COST_MINUS)
    X_Minus=pop(aa<=epss);
    [~,INDEX_M]=sort(COST_MINUS);
    X_Minus=X_Minus(INDEX_M);
end

X_PLUS=[];
SUM_C_PLUS=aa(aa>epss);
COST_PLUS=[pop(aa>epss).cost];
if ~isempty(SUM_C_PLUS)
    AD=unique(SUM_C_PLUS);
    if size(AD,2)==Npop
        X_PLUS=pop(aa>epss);
        [~,INDEX_P]=sort(SUM_C_PLUS);
    else
        X_PLUS=pop(aa>epss);
        [OR,INDEX]=sort(SUM_C_PLUS);
        COST_PLUS=COST_PLUS(INDEX);
```

```
        kk=1;
        N=0;

        for m=1:size(AD,2)
            B=length(find(AD(m)==OR));
            [~,IND]=sort(COST_PLUS(kk:N+B));
            INDEX_P(kk:N+B)=IND;
            kk=B+1;
            N=N+B;
        end
    end
    X_PLUS=X_PLUS(INDEX_P);
end

pop=[X_Minus;X_PLUS];
%------------- Forming the global best ----------------------------------------------
global_best=pop(1);
%%
%----------- Main Loop of PSO -------------------------------------------
disp('******************** Particle Swarm Optimization
(PSO)********************');
disp('*Iterations  Function Values  Sum_Const ****************************');
disp('*********************************************************************');
FF=zeros(max_it,1);

for i=1:max_it
   if i==1
       local_best=global_best;
   end
    %---------- Moving particals to the local and global best positions-------------------------------
--------
    for j=1:Npop
```

```
        pop(j).velocity = w.*pop(j).velocity+c1.*rand(1).*(global_best.position-
pop(j).position)+c2.*rand(1).*(local_best.position-pop(j).position);
        pop(j).position = pop(j).velocity+pop(j).position;
        pop(j).position=min(pop(j).position,UB);
        pop(j).position=max(pop(j).position,LB);



        pop(j).cost=objective_function(pop(j).position);
        c=[constraints(pop(j).position);
            abs(constraints_eq(pop(j).position));];
        pop(j).const=sum(c(c>epss));
    end



    local_best=global_best;
    w=w*alpha;

   for j=1:Npop
        if (global_best.const<=epss && pop(j).const<=epss &&
pop(j).cost<global_best.cost)||(global_best.const>epss && pop(j).const<=epss)

            global_best=pop(j);

        elseif global_best.const>epss && pop(j).const>epss && global_best.const>pop(j).const

            global_best=pop(j);

        end
   end
disp(['Iteration: ',num2str(i),'   Fmin= ',num2str(global_best.cost),'  Sum_Const=
',num2str(global_best.const)]);
FF(i)=objective_function(global_best.position);
cq=[constraints(global_best.position);
            abs(constraints_eq(global_best.position));];
```

```
FF2(i)=sum(cq(cq>epss));
end
%% Results and Plot

figure
subplot(2,1,1)
plot(FF,'LineWidth',2);
ylabel('Function Value of Global best');
xlabel('Number of Iterations');
subplot(2,1,2)
plot(FF2,'LineWidth',2);
ylabel('Total constraint violations of Global best');
xlabel('Number of Iterations');


Xmin=global_best.position;
Fmin=objective_function(Xmin);
SUM_Constraints=global_best.const;
end
```

CODE FOR PSO

```
clc                                          % To clear the command window
lb = [0 0 0]                                 % Lower bound
ub = [90 90 90]                              % Upper bound
tic
prob = @ObjFunSHE                            % Fitness function

%% Algorithm parameters
Np = 100                                     % Population Size
T = 100                                      % No. of iterations
w = 0.8                                      % Interia weight
acc1 = 1.5                                   % Acceleration coefficient
acc2 = 1.5                                   % Acceleration coefficient


%% Particle Swarm Optimization
f = NaN(Np,1)                 % Vector to store the fitness function value of the population

D = length(lb)                % Determining the number of decision variable in the problem

randpop = repmat(lb,Np,1) + repmat((ub-lb),Np,1).*rand(Np,D) % Generation of the initial
population
trans1 = randpop.'
trans2 = sort(trans1)
P = trans2.'                  %% Sorted population

v = repmat(lb,Np,1) + repmat((ub-lb),Np,1).*rand(Np,D) % Generation of initial velocity

for p = 1:Np
   a=P(p,:)
   f(p) = prob(a)                     % Evaluating the fitness function of the initial
population
end
```

```
pbest = P                                   % Initialize the personal best solution
f_pbest = f;                                % Initialize the fitness of the personal best solutions


[f_gbest,ind] = min(f_pbest)            % Determining the best objective fitness function value
gbest = P(ind,:)                        % Determining the best solution

for t = 1:T

   for p = 1:Np

      v(p,:) = w*v(p,:) + acc1*rand(1,D).*(pbest(p,:)-P(p,:)) + acc2*rand(1,D).*(gbest -
P(p,:)) % Determine the new velocity

      P(p,:) = P(p,:) + v(p,:)    % Update the position

      P(p,:) = max(P(p,:),lb)    % Bounding the violating variables to their lower bound
      P(p,:) = min(P(p,:),ub)     % Bounding the violating variables to their upper bound

        a = P(p,:)
      f(p)  = prob(a)       % Determining the fitness of the new solution

      if f(p) < f_pbest(p)

         f_pbest(p) = f(p)      % updating the fitness function value of the personal best
         pbest(p,:) = P(p,:)     % updating the personal best solution

         if f_pbest(p) < f_gbest

            f_gbest = f_pbest(p) % updating the fitness function value of the best solution
            gbest = pbest(p,:)   % updating the best solution

         end
```

```
        end
        gbestitr(t) = f_gbest;
    end
end

bestfitness = f_gbest
bestsol = gbest
bestsol = sort(bestsol);
a1 = (bestsol(1));
a2 = (bestsol(2));
a3 = (bestsol(3));

Vdc = 85.15
MI = (cosd(a1)+cosd(a2)+cosd(a3))/3
toc
```

C. ABC CODE FOR OPTIMIZATION

```
clc
clear
tic
%% Problem Settings
lb = [0 0 0]                                    % Lower bound
ub = [90 90 90]                                 % Upper bound
prob = @ObjFunSHE                               % Fitness function
%% Algorithm parameters
Np = 100                                        % population size
T = 200                                         % number of iterations
limit = 5                                        % permissible number of failures
%% starting of ABC
f =NaN(Np,1)                    % vector to store the objective function value of the population
fit =NaN(Np,1)                  % vector to store the fitness function of the population
trial = NaN(Np,1)       % initialising the number of decision variables in the population
D = length(lb)          % Determining the number of decision variables in the population
randpop = repmat(lb,Np,1) + repmat ((ub-lb),Np,1).*rand(Np,D)    %Generation of initial
population
trans1 = randpop.'
trans2 = sort(trans1)
P = trans2.'
for p = 1:Np
   a=P(p,:)
   f(p) = prob(a)    % Evaluating the objective function value
   fit(p) = CalFit(f(p))  % Evaluating the fitness function value
end
[bestobj,ind] = min(f)          % Determine  and memorize the best objective value
bestsol = P(ind,:)              % Determine and memorize the best solution

for t = 1:T
```

```
%% Employed Bee phase
for i= 1:Np
    [trial,P,fit,f] = GenNewSol(prob,lb , ub, Np, i,P ,fit,trial, f, D)
end
%% Onlooker Bee Phase
probability = 0.9 * (fit/max(fit)) + 0.1
m = 0; n = 1
while(m < Np)
    if(rand < probability(n))
        [trial,P,fit,f] = GenNewSol (prob, lb, ub, Np, n, P, fit, trial, f,D)
         m = m + 1
    end
    n = mod(n,Np) + 1
end
[bestobj,ind] = min([f;bestobj])
CombinedSol = [P;bestsol]
bestsol = CombinedSol(ind,:)
%% Scout Bee Phase
[val,ind] = max(trial)
if (val > limit)
    trial(ind) = 0
    P(ind,:) = lb  + (ub-lb).*rand(1,D)
    a= P(ind,:)
    f(ind) = prob (a)
    fit (ind) = CalFit(f(ind))
 end
end
[bestobj,ind] = min([f;bestobj])
CombinedSol = [P;bestsol]
bestsol = CombinedSol(ind,:)
bestsol = sort(bestsol);
a1 = (bestsol(1))
a2 = (bestsol(2))
a3 = (bestsol(3))
```

```
Vdc = 85.15
M = (cosd(a1)+cosd(a2)+cosd(a3))/3
toc
```

****

----------Genc.m file code----------

```
function [trial,P,fit,f] = GenNewSol(prob, lb, ub, Np, n, P, fit, trial, f, D)
j = randi(D,1);                % Randomly select the variables that is to be changed
p = randi(Np,1);               % Randomly select the neighbour
while (p == n)
   p = randi(Np,1);
end
Xnew = P(n,:);                            % variable to generate new solution
Phi = -1 + (1-(-1))*rand;                 %Generating a random number between -1 and 1
Xnew(j) = P(n,j) + Phi*(P(n,j) - P(p,j));        % Generating a new solution
Xnew(j) = min(Xnew(j),ub(j));                    % Bounding the violating variables to their
upper bound
Xnew(j) = max(Xnew(j),lb(j));          % Bounding the violating variables to their lower bound
ObjNewSol = prob(Xnew);                           %Determining the objective function value
FitnessNewSol = CalFit(ObjNewSol);          % Determining the fitness function value
if (FitnessNewSol > fit(n))
   P(n,:) = Xnew;                                 % New solution enters the pool of solutions
   fit(n) = FitnessNewSol;                        % Update the fitness value
   f(n) = ObjNewSol;                              % Update the objective function value
   trial(n) = 0;                                  % Resetting trail to zero
else
   trial(n) = trial(n)+1;                         % Increase the value of trail counter
end
```

****

---------CalFit.m file code----------

```
function fit = CalFit(f)
if f >= 0
   fit = 1/(1+f);
else
   fit = 1 + abs(f);
```

```
end
```

D. DE CODE FOR OPTIMIZATION

```
clc                                          % To clear the command window
clear                                        % To clear the workspace
tic
%% Problem settings
lb = [0 0 0]                                 % Lower bound
ub = [90 90 90]                              % Upper bound
prob = @ObjFunSHE                            % Fitness function
%% Parameters for Differential Evolution
Np = 100                                     % Population Size
T = 200                                      % No. of iterations
Pc =0.8                                      % Crossover probability
F = 0.85                                     % Scaling factor
%% Starting of DE
f = NaN(Np,1)          % Vector to store the fitness function value of the Np population
fu = NaN(Np,1)         % Vector to store the fitness function value of newly generated trail
vector
D = length(lb)         % Determining the number of decision variable
U = NaN(Np,D)          % Matrix to store trail solution
randpop = repmat(lb,Np,1 ) + repmat ((ub-lb),Np,1).* rand(Np,D)
trans1 = randpop.'
trans2 = sort(trans1)
P = trans2.'
for p = 1:Np
   a=P(p,:)
   f(p) = prob(a)
end
%% Iteration loop
for t = 1:T
   for i = 1:Np
 %% Mutation
```

```
  Candidates = [1:i-1 i+1:Np]
  idx = Candidates(randperm(Np-1,3))

      X1 = P(idx(1),:)
      X2 = P(idx(2),:)
      X3 = P(idx(3),:)
      V = X1 +F*(X2-X3)
      %% Crossover
      del = randi(D,1)
      for j = 1:D
         if (rand <= Pc) || del == j
            U(i,j)= V(j)
         else
            U(i,j) = P(i,j)
         end
      end
   end

   %% Bounding and Greedy selection
   for j = 1:Np

      U(j,:) = min (ub,U(j,:))
      U(j,:) = max (lb,U(j,:))

      fu(j) = prob(U(j,:))

      if fu(j) < f(j)
         P(j,:) = U(j,:)
         f(j) = fu(j)
      end
   end
end
[bestfitness, ind] =  min(f)
bestsol = P(ind,:)
```

```
bestsol = sort(bestsol);
a1 = (bestsol(1))
a2 = (bestsol(2))
a3 = (bestsol(3))
MI = (cosd(a1)+cosd(a2)+cosd(a3))/3
Vdc=85.15
toc
```