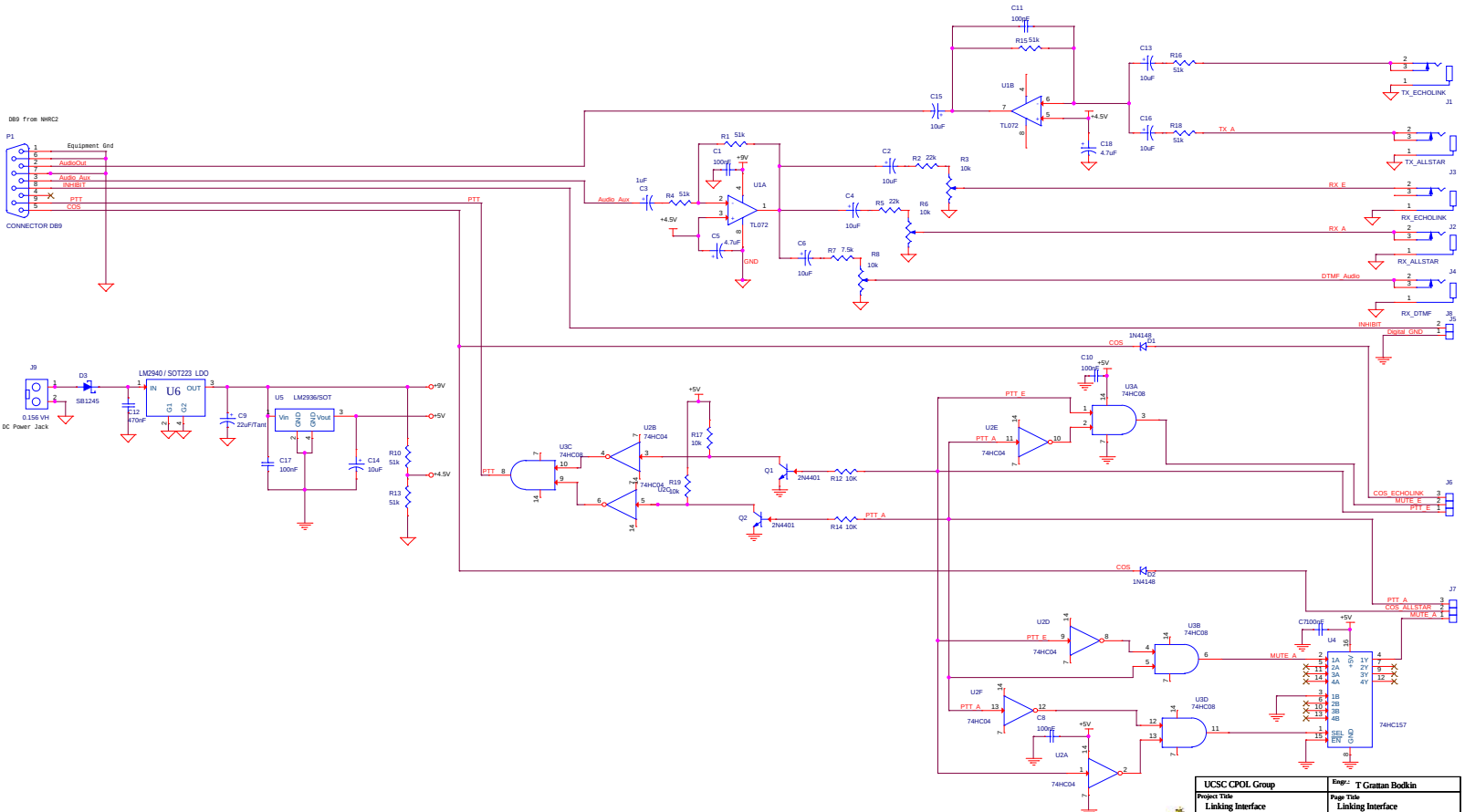

UCSC CPOL Group		Engr.: T Grattan Bodkin	
Project Title: Linking Interface		Page Title: Linking Interface	
Size: Custom	Project File	Project Rev: 1.0	Page Rev: 1.0
Date: Wednesday, April 15, 2015		Sheet 1 of 1	