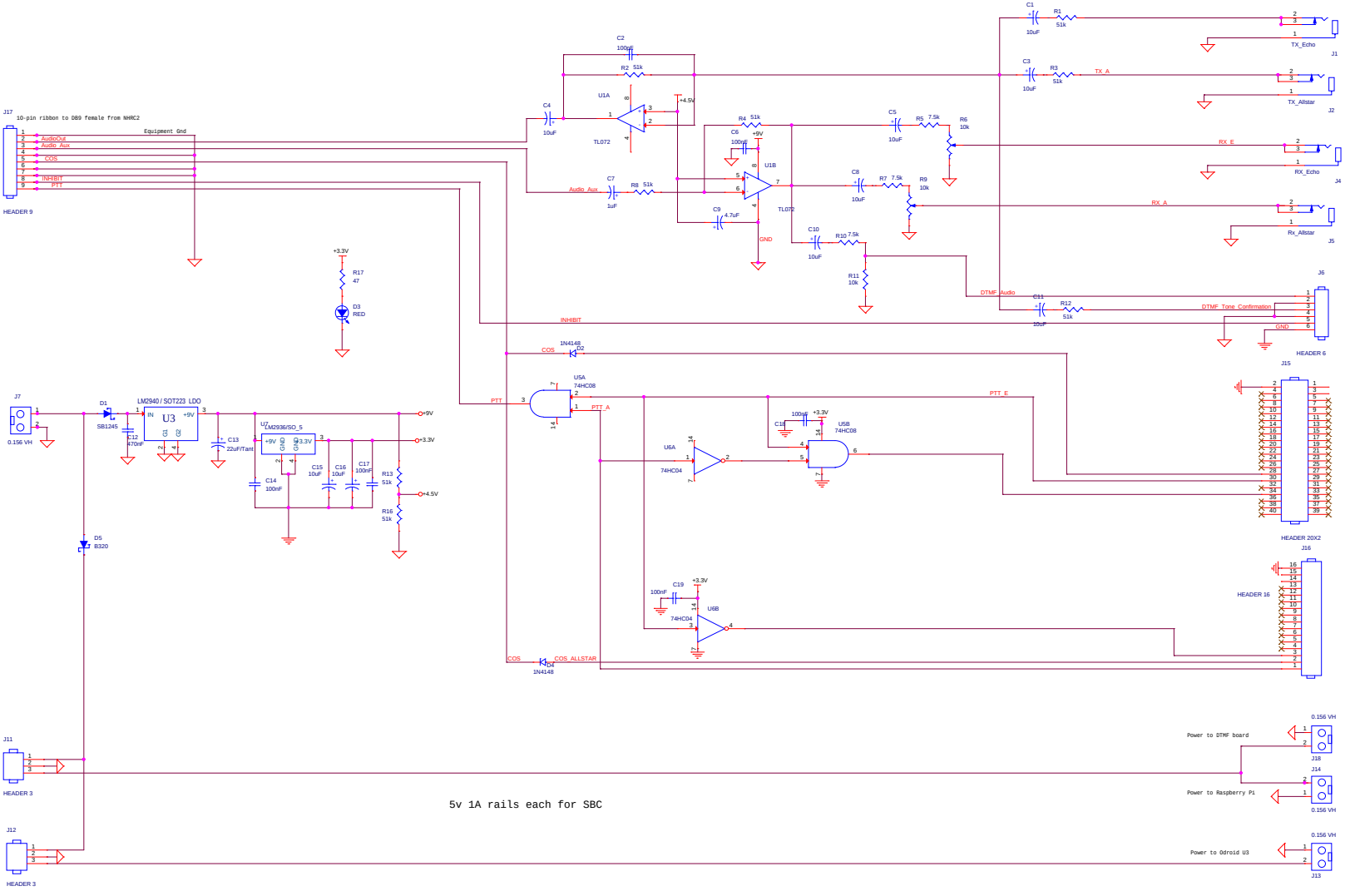

UCSC CPOL Group		Engr.: T Grattan Bodkin	
Project Title: Linking Interface		Page Title: Linking Interface	
Size: Custom	Project File	Project Rev: 2.1	Page Rev: 1.0
Date: Wednesday, June 03, 2015		Sheet 1 of 1	