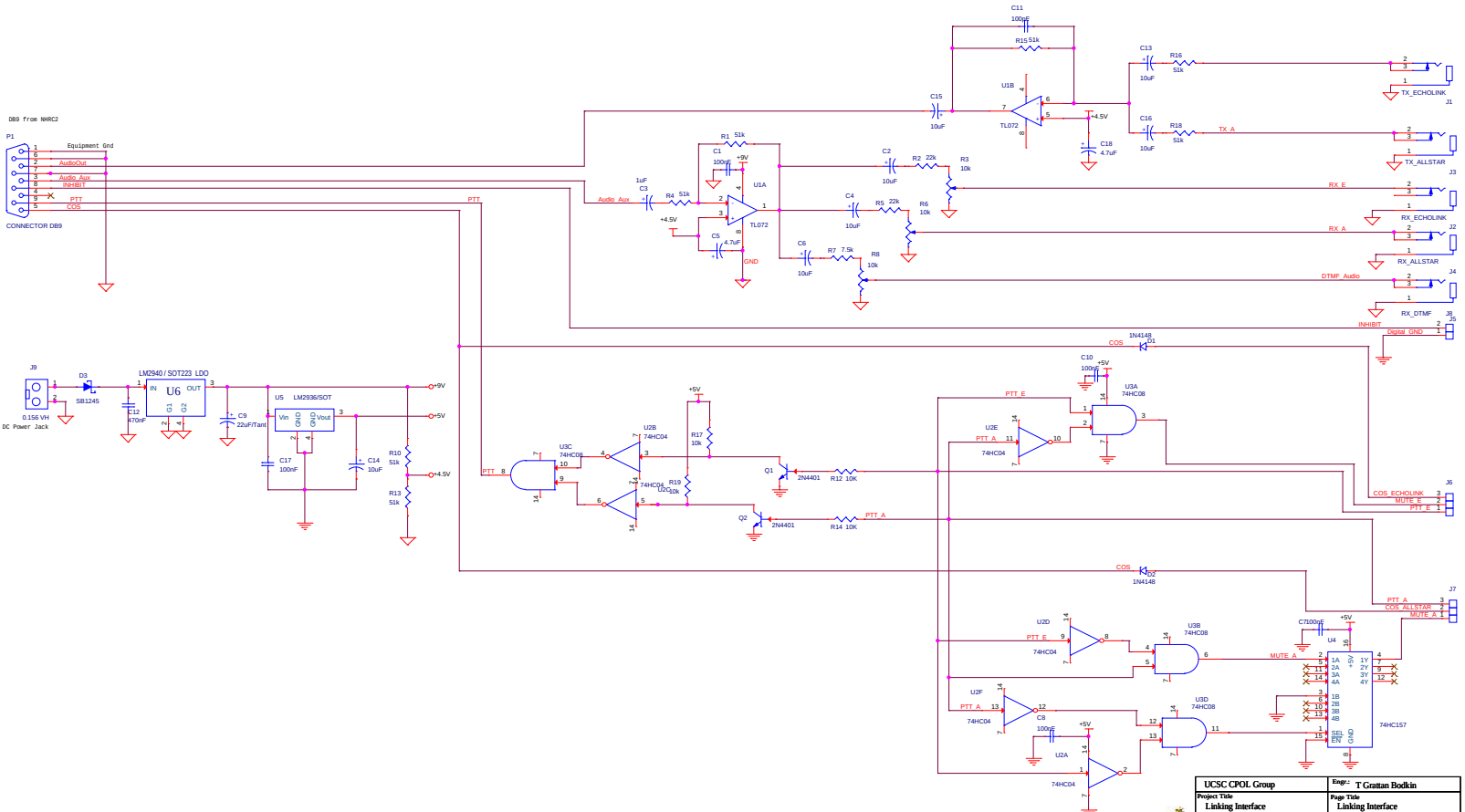

UCSC CPOL Group		Engr.: T Grattan Bodkin	
Project Title: Linking Interface		Page Title: Linking Interface	
Size: Custom	Project File	Project Rev: 1.0	Page Rev: 1.0
Date: Wednesday, April 15, 2015		Sheet 1 of 1	

Inhibit
Dig_GND
PTT_Echo
Mute_Echo
COS_Echo
MUTE_Allstar
COS_Allstar
PTT_Allstar
Echo In ->
Allstar In ->
Allstar Out <-
DTMF Out <-
Echo Out <-
U3
U2
R12
R13
R17
R14
R19
Q1
Q2
J6
J7
J8
C7
C10
C1
R5
R1
R7
R2
R16
R18
R3