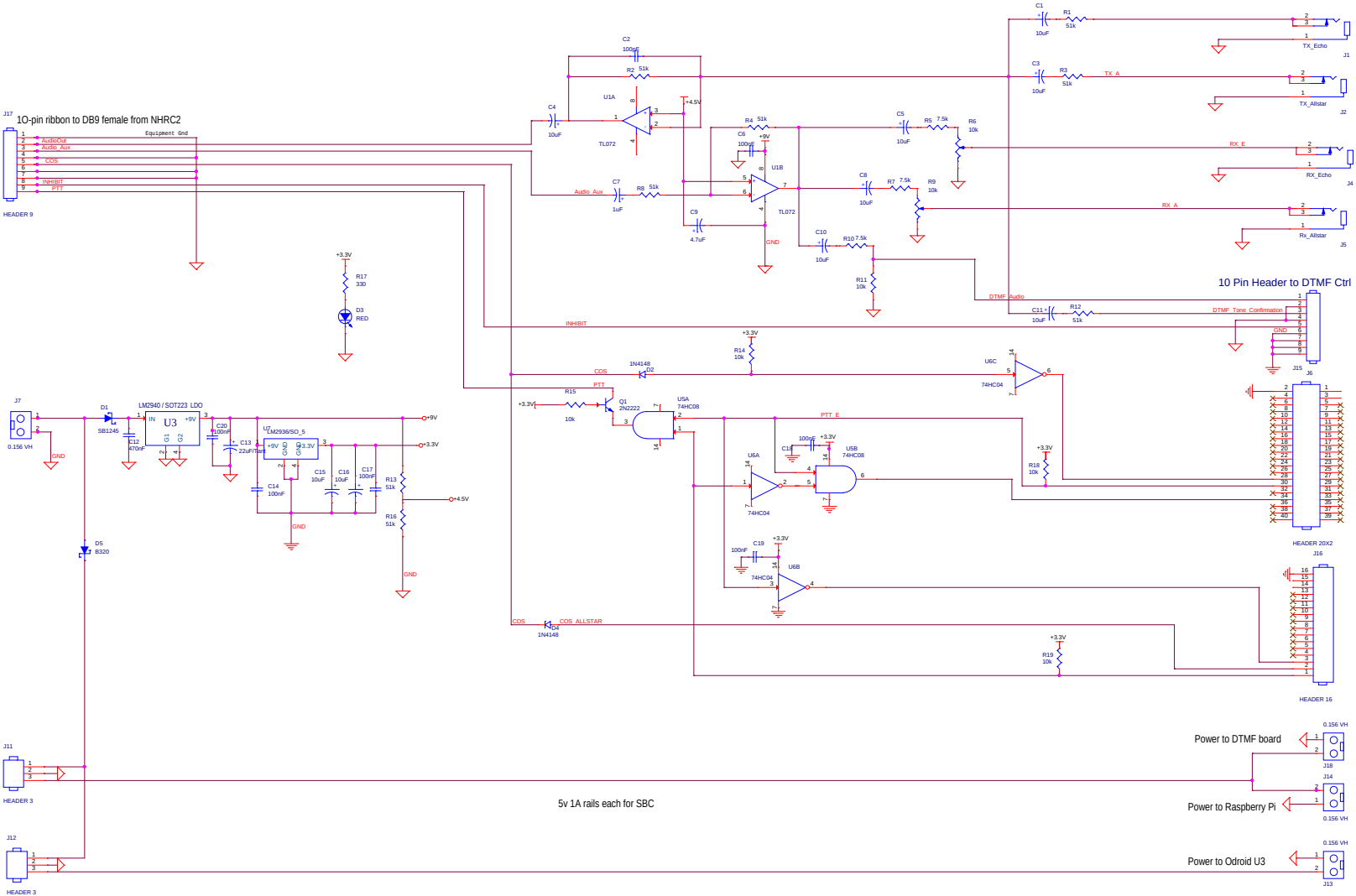

Tim Bodkin - UCSC CPOL Group			
Title	Linking Interface		
Size	Document Number		Rev 2.10
Date: Monday, June 08, 2015		Sheet 1 of 1	