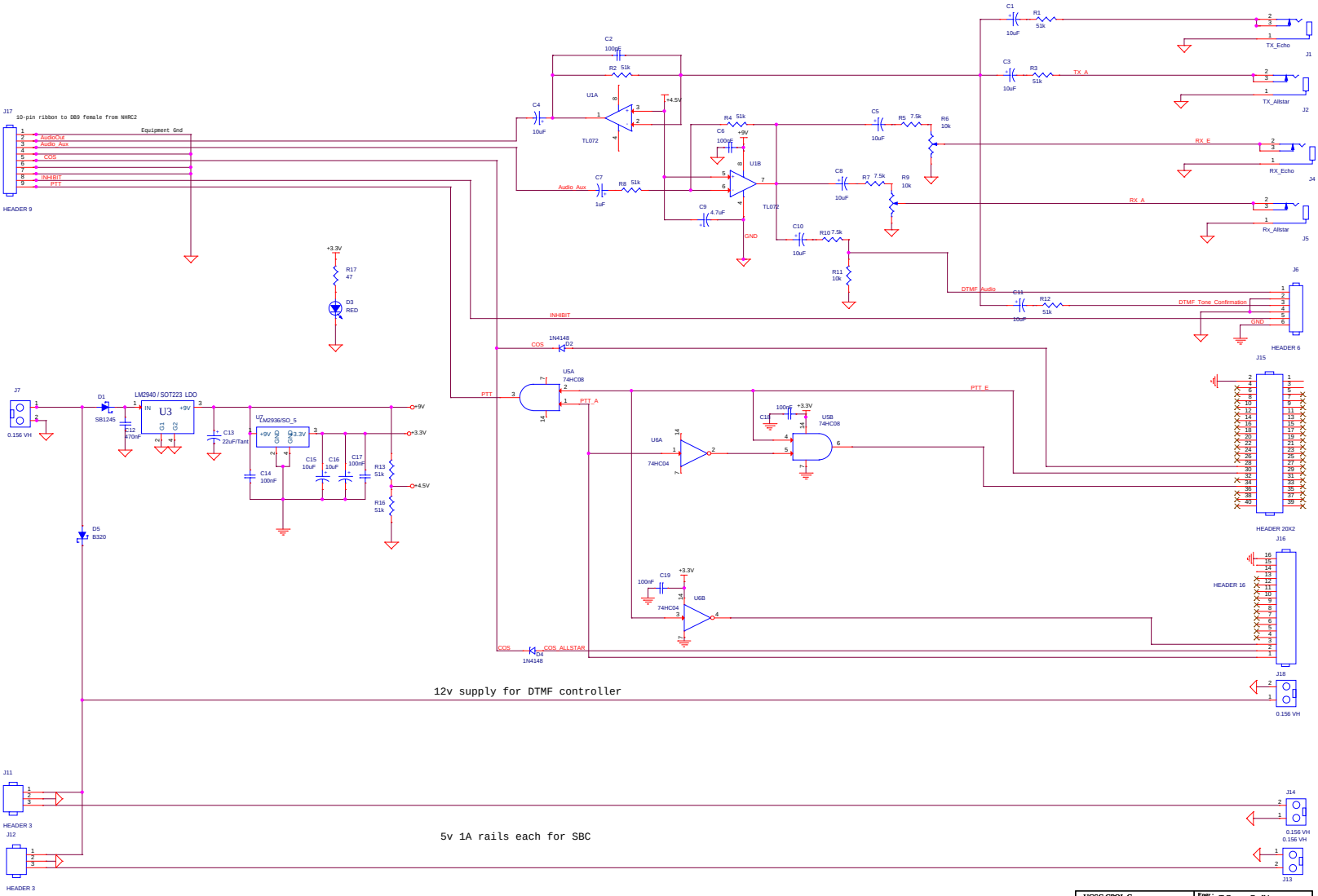


| | | | |
|---|---|---|---|
| UCSC CPOL Group | | Engr.: T Grattan Bodkin | |
| Project Title: Linking Interface | | Page Title: Linking Interface | |
| Size: Custom | Project File | Project Rev: 2.1 | Page Rev: 1.0 |
| Date: Sunday, May 31, 2015 | | Sheet 1 of 1 | |