MOTOR DRIVER					
EN	IN R	IN L	MOTOR	SENSE L	SENSE R
L	X	X	SLEEP	Table 9	Table 9
H	L	L	BRAKE	Table 9	Table 9
H	H	H	BRAKE	Table 9	Table 9
H	H	L	RIGHT	Table 10	Table 10
H	L	H	LEFT	Table 10	Table 10
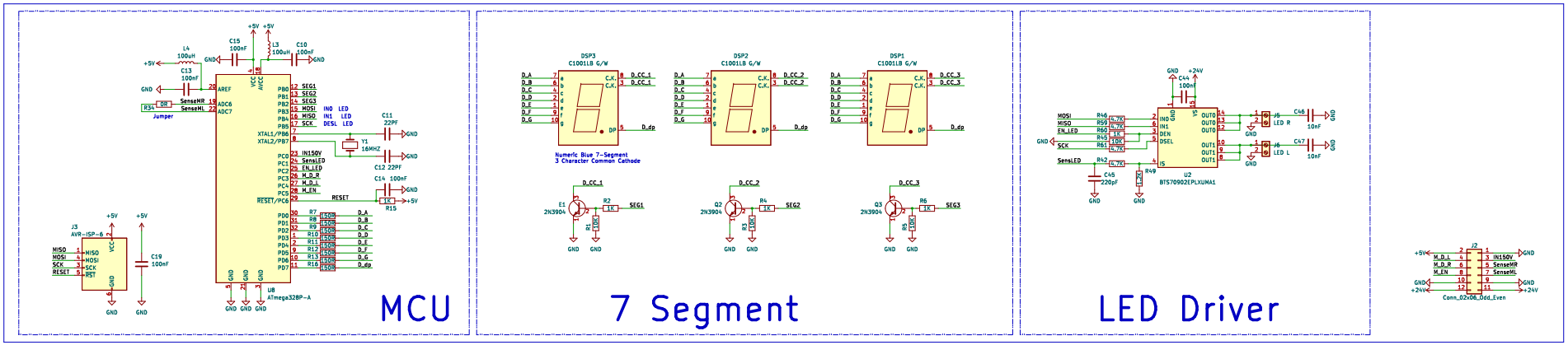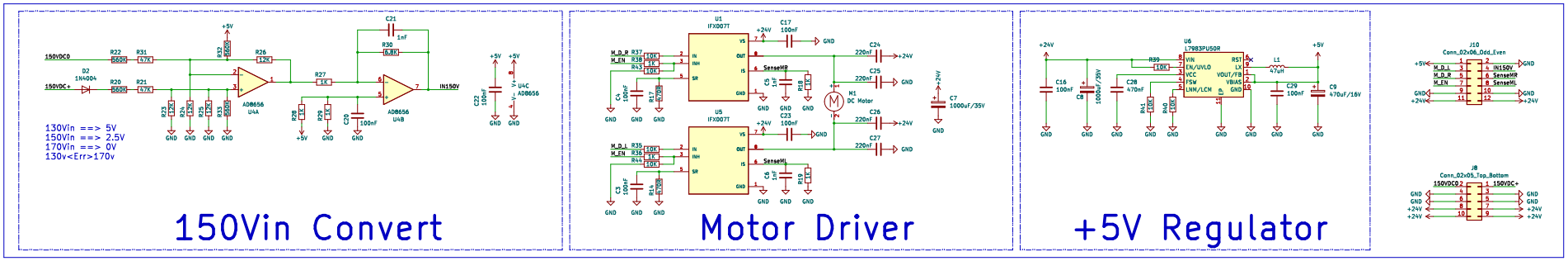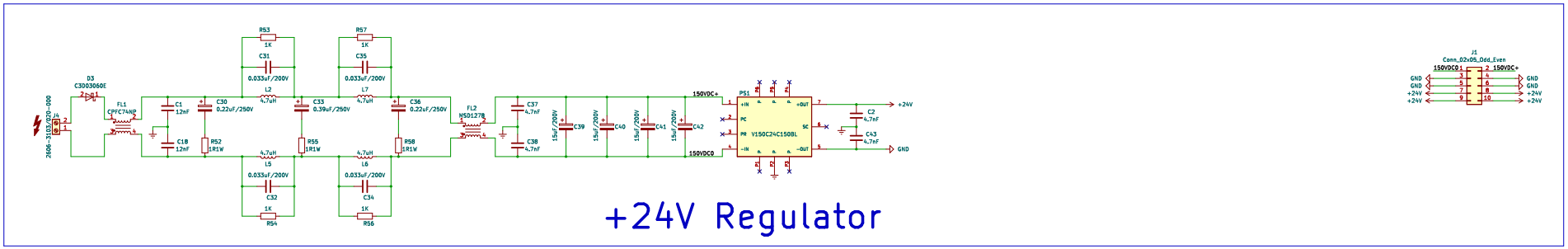
LED DRIVER						
EN	MOSI IND	MISO IN1	SCK DESL	OUT0	OUT1	SENSE
L	X	X	X	OFF	OFF	Z
H	X	X	L	OFF	OFF	Z
H	L	L	H	OFF	OFF	Table 11
H	H	H	H	ON	ON	Table 11
H	H	L	H	ON	OFF	Table 11
H	L	H	H	OFF	ON	Table 11