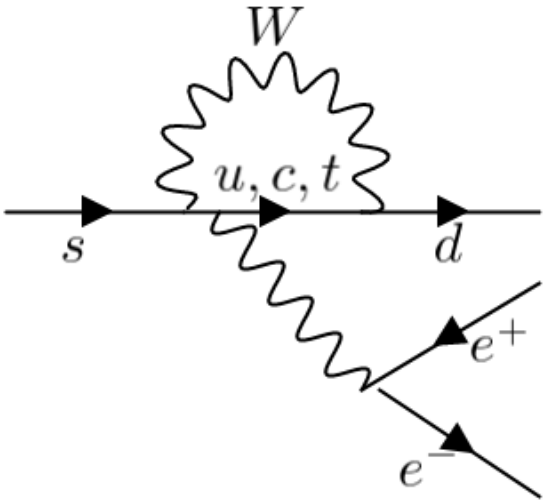
W
u, c, t
s
d
e+
e−

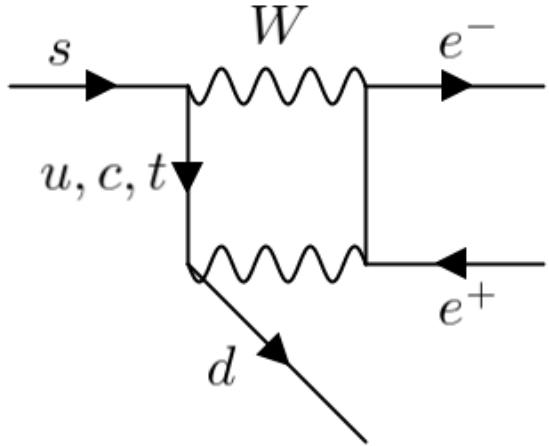
s
W
e−
u, c, t
e+
d