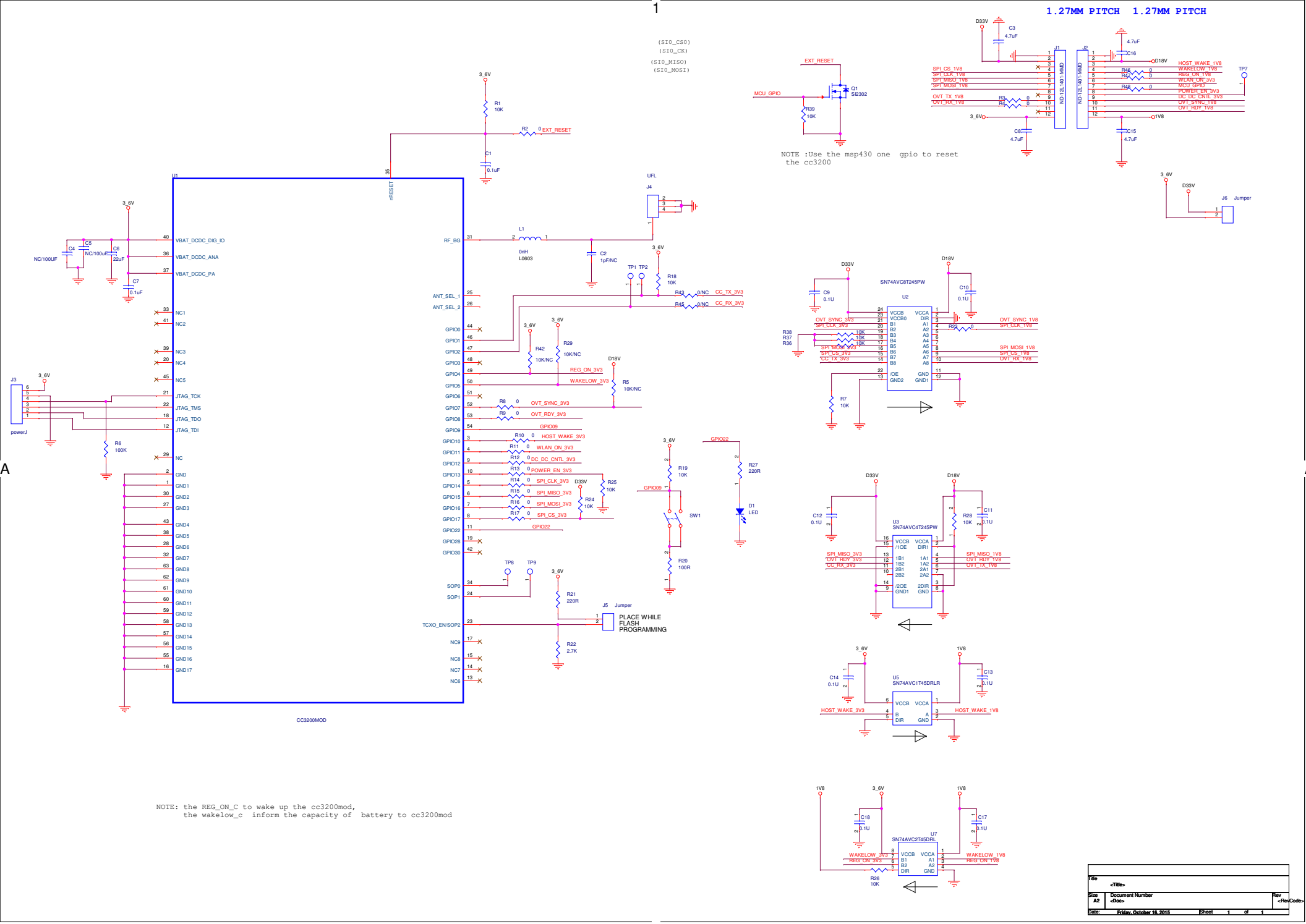
1.27MM PITCH 1.27MM PITCH
(SIO_CS0)
(SIO_CK)
(SIO_MISO)
(SIO_MOSI)
EXT_RESET
MCU_GPIO
Q1 SI2302
R39 10K
NOTE :Use the msp430 one gpio to reset the cc3200
D33V
C3 4.7uF
J1 ND-12L1401-MMD
J2 ND-12L1401-MMD
SPI_CS_1V8
SPI_CLK_1V8
SPI_MISO_1V8
SPI_MOSI_1V8
OVT_TX_1V8
OVT_RX_1V8
HOST_WAKE_1V8
WAKELOW_1V8
REG_ON_1V8
WLAN_ON_3V3
MCU_GPIO
POWER_EN_3V3
DC_DC_CNTL_3V3
OVT_SYNC_1V8
OVT_RDY_1V8
TP7
3_6V
C8 4.7uF
C15 4.7uF
C16 4.7uF
D18V
1V8
R1 10K
R2 0 EXT_RESET
C1 0.1uF
U1
nRESET
UFL
J4
L1 0nH L0603
C2 1pF/NC
TP1 TP2
R18 10K
R43 0/NC CC_TX_3V3
R45 0/NC CC_RX_3V3
ANT_SEL_1
ANT_SEL_2
R42 10K/NC
R29 10K/NC
REG_ON_3V3
WAKELOW_3V3
R5 10K/NC
R8 0 OVT_SYNC_3V3
R9 0 OVT_RDY_3V3
GPIO09
R10 0 HOST_WAKE_3V3
R11 0 WLAN_ON_3V3
R12 0 DC_DC_CNTL_3V3
R13 0 POWER_EN_3V3
R14 0 SPI_CLK_3V3
R15 0 SPI_MISO_3V3
R16 0 SPI_MOSI_3V3
R17 0 SPI_CS_3V3
GPIO22
R24 10K
R25 10K
R19 10K
R20 100R
SW1
R27 220R
D1 LED
TP8 TP9
R21 220R
R22 2.7K
J5 Jumper
PLACE WHILE FLASH PROGRAMMING
VBAT_DCDC_DIG_IO
VBAT_DCDC_ANA
VBAT_DCDC_PA
C4 NC/100UF
C5 NC/100uF
C6 22uF
C7 0.1uF
RF_BG
NC1
NC2
NC3
NC4
NC5
JTAG_TCK
JTAG_TMS
JTAG_TDO
JTAG_TDI
NC
GND
GND1
GND2
GND3
GND4
GND5
GND6
GND7
GND8
GND9
GND10
GND11
GND12
GND13
GND14
GND15
GND16
GND17
GPIO0
GPIO1
GPIO2
GPIO3
GPIO4
GPIO5
GPIO6
GPIO7
GPIO8
GPIO9
GPIO10
GPIO11
GPIO12
GPIO13
GPIO14
GPIO15
GPIO16
GPIO17
GPIO22
GPIO28
GPIO30
SOP0
SOP1
TCXO_EN/SOP2
NC9
NC8
NC7
NC6
CC3200MOD
J3 powerJ
R6 100K
J6 Jumper
SN74AVC8T245PW
U2
C9 0.1U
C10 0.1U
R38 10K
R37 10K
R36 10K
R7 10K
R23 0
OVT_SYNC_3V3
SPI_CLK_3V3
SPI_MOSI_3V3
SPI_CS_3V3
CC_TX_3V3
OVT_SYNC_1V8
SPI_CLK_1V8
SPI_MOSI_1V8
SPI_CS_1V8
OVT_RX_1V8
U3 SN74AVC4T245PW
C12 0.1U
C11 0.1U
R28 10K
SPI_MISO_3V3
OVT_RDY_3V3
CC_RX_3V3
SPI_MISO_1V8
OVT_RDY_1V8
OVT_TX_1V8
U5 SN74AVC1T45DRLR
C14 0.1U
C13 0.1U
HOST_WAKE_3V3
HOST_WAKE_1V8
U7 SN74AVC2T45DRL
C18 0.1U
C17 0.1U
WAKELOW_3V3
REG_ON_3V3
WAKELOW_1V8
REG_ON_1V8
R26 10K
NOTE: the REG_ON_C to wake up the cc3200mod,
the wakelow_c inform the capacity of battery to cc3200mod
Title
<Title>
Size A2
Document Number <Doc>
Rev <RevCode>
Date: Friday, October 16, 2015
Sheet 1 of 1