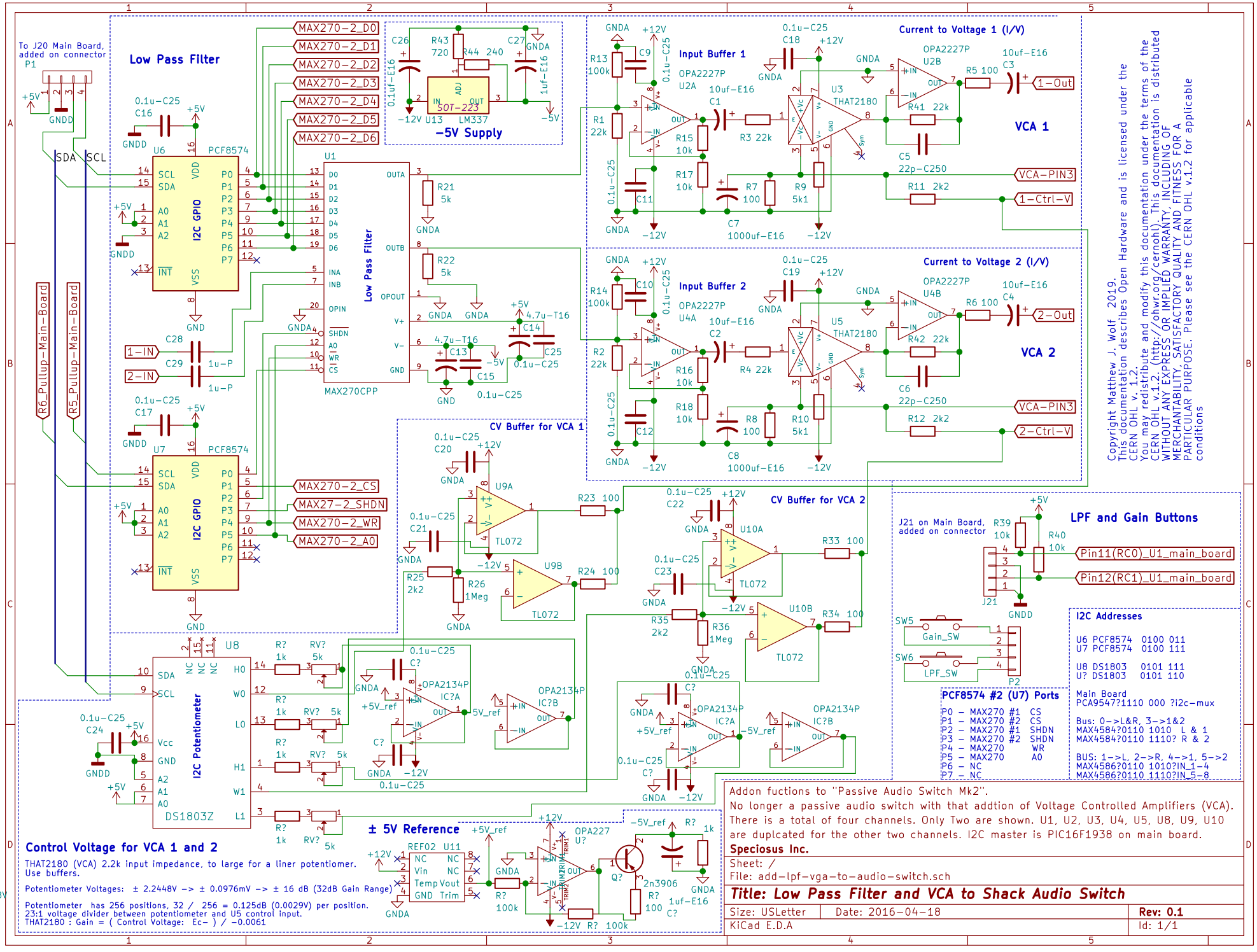
Low Pass Filter
To J20 Main Board, added on connector P1
MAX270-2_D0
MAX270-2_D1
MAX270-2_D2
MAX270-2_D3
MAX270-2_D4
MAX270-2_D5
MAX270-2_D6
MAX270-2_CS
MAX27-2_SHDN
MAX270-2_WR
MAX270-2_A0
SDA
SCL
R6_Pullup-Main-Board
R5_Pullup-Main-Board
U6 PCF8574
U7 PCF8574
I2C GPIO
U1 MAX270CPP
Low Pass Filter
1-IN
2-IN
-5V Supply
U13 LM337
SOT-223
Input Buffer 1
Input Buffer 2
OPA2227P
U2A
U4A
U2B
U4B
U3 THAT2180
U5 THAT2180
Current to Voltage 1 (I/V)
Current to Voltage 2 (I/V)
VCA 1
VCA 2
1-Out
2-Out
VCA-PIN3
1-Ctrl-V
2-Ctrl-V
CV Buffer for VCA 1
CV Buffer for VCA 2
U9A
U9B
U10A
U10B
TL072
LPF and Gain Buttons
J21 on Main Board, added on connector
Pin11(RC0)_U1_main_board
Pin12(RC1)_U1_main_board
Gain_SW
LPF_SW
U8 DS1803Z
I2C Potentiometer
OPA2134P
IC?A
IC?B
Control Voltage for VCA 1 and 2
THAT2180 (VCA) 2.2k input impedance, to large for a liner potentiomer. Use buffers.
Potentiometer Voltages: ± 2.2448V -> ± 0.0976mV -> ± 16 dB (32dB Gain Range)
Potentiometer has 256 positions, 32 / 256 = 0.125dB (0.0029V) per position.
23:1 voltage divider between potentiometer and U5 control input.
THAT2180 : Gain = (Control Voltage: Ec-) / -0.0061
± 5V Reference
REF02 U11
OPA227 U?
2n3906
+2.448V
-2.448V
I2C Addresses
U6 PCF8574 0100 011
U7 PCF8574 0100 111
U8 DS1803 0101 111
U? DS1803 0101 110
Main Board
PCA9547?1110 000 ?i2c-mux
Bus: 0->L&R, 3->1&2
MAX4584?0110 1010 L & 1
MAX4584?0110 1110? R & 2
BUS: 1->L, 2->R, 4->1, 5->2
MAX4586?0110 1010?IN_1-4
MAX4586?0110 1110?IN_5-8
PCF8574 #2 (U7) Ports
P0 - MAX270 #1 CS
P1 - MAX270 #2 CS
P2 - MAX270 #1 SHDN
P3 - MAX270 #2 SHDN
P4 - MAX270 WR
P5 - MAX270 A0
P6 - NC
P7 - NC
Addon fuctions to "Passive Audio Switch Mk2".
No longer a passive audio switch with that addtion of Voltage Controlled Amplifiers (VCA).
There is a total of four channels. Only Two are shown. U1, U2, U3, U4, U5, U8, U9, U10 are duplcated for the other two channels. I2C master is PIC16F1938 on main board.
Speciosus Inc.
Sheet: /
File: add-lpf-vga-to-audio-switch.sch
Title: Low Pass Filter and VCA to Shack Audio Switch
Size: USLetter
Date: 2016-04-18
Rev: 0.1
KiCad E.D.A
Id: 1/1
Copyright Matthew J. Wolf 2019.
This documentation describes Open Hardware and is licensed under the CERN OHL v. 1.2.
You may redistribute and modify this documentation under the terms of the CERN OHL v.1.2. (http://ohwr.org/cernohl). This documentation is distributed WITHOUT ANY EXPRESS OR IMPLIED WARRANTY, INCLUDING OF MERCHANTABILITY, SATISFACTORY QUALITY AND FITNESS FOR A PARTICULAR PURPOSE. Please see the CERN OHL v.1.2 for applicable conditions