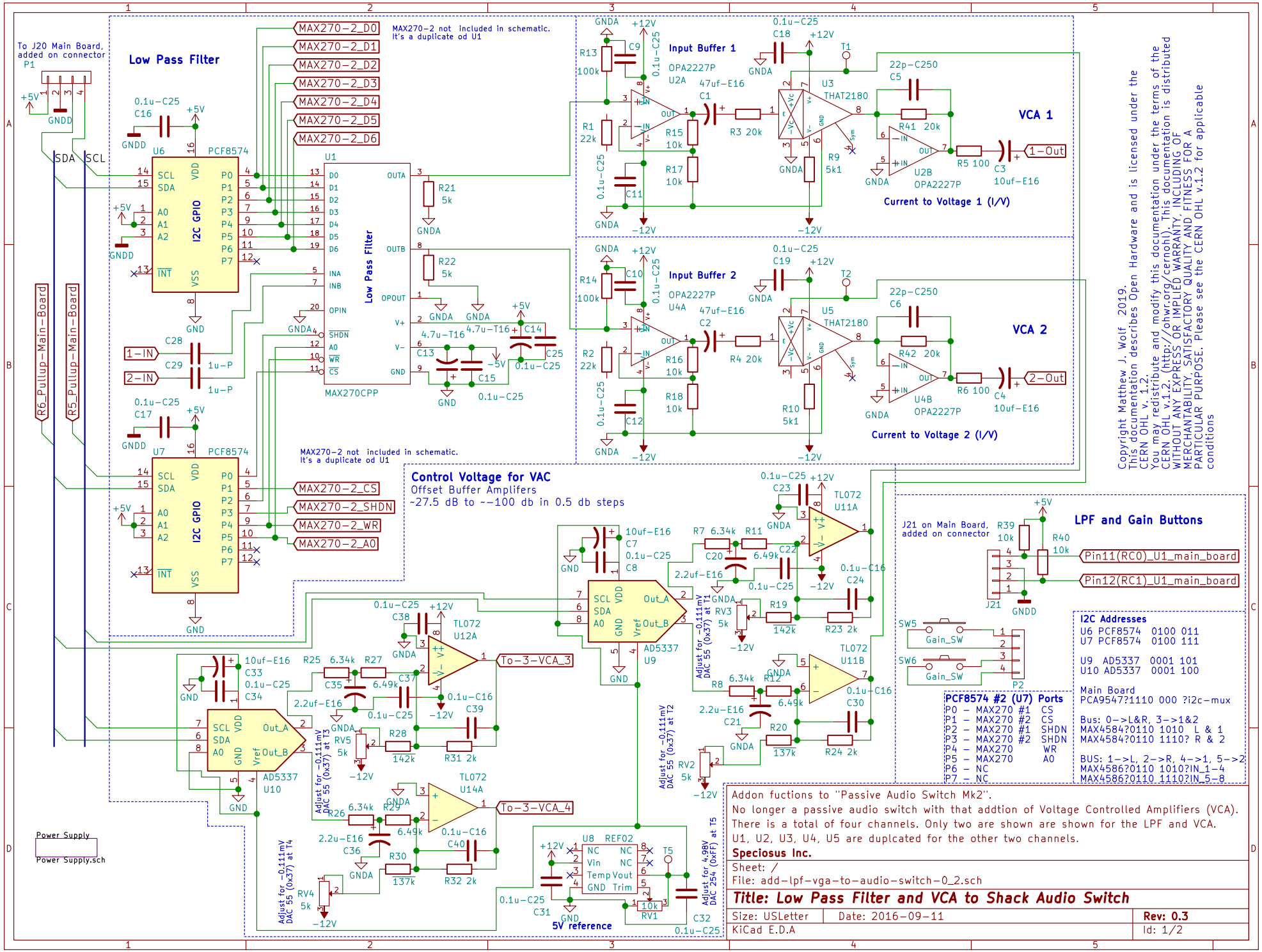

Copyright Matthew J. Wolf 2019.
This documentation describes Open Hardware and is licensed under the CERN OHL v. 1.2.
You may redistribute and modify this documentation under the terms of the CERN OHL v.1.2. (http://ohwr.org/cernohl). This documentation is distributed WITHOUT ANY EXPRESS OR IMPLIED WARRANTY, INCLUDING OF MERCHANTABILITY, SATISFACTORY QUALITY AND FITNESS FOR A PARTICULAR PURPOSE. Please see the CERN OHL v.1.2 for applicable conditions

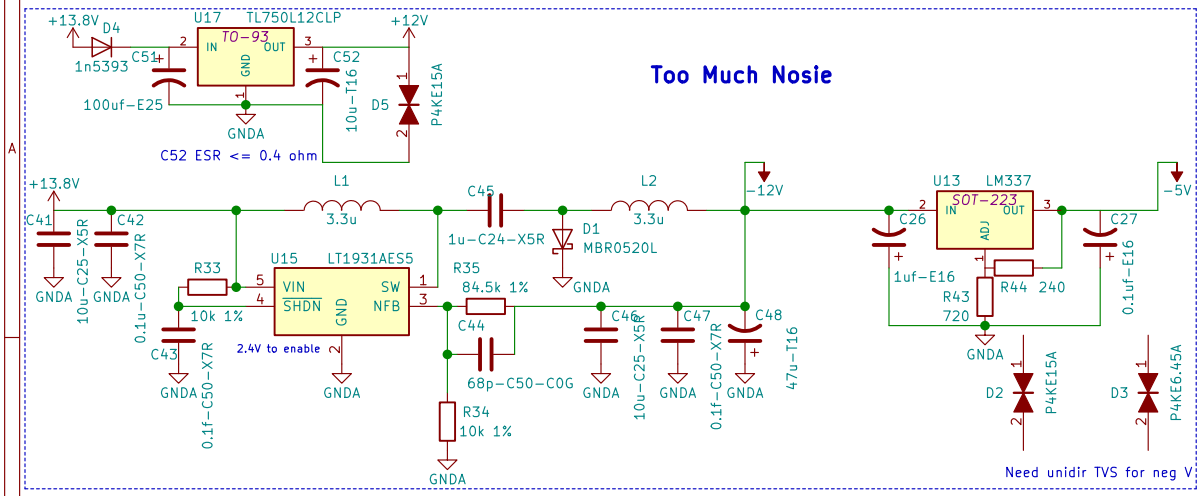

Current

12V – main source

Main Board	50ma
Balanced Audio	95ma
LPF Board	60ma
Gain Board	120ma
Total	250ma

~Rounded up to 5ma or next 10ma

5V

Main Board	???
Balanced Audio	?0ma – only ±12V
LPF Board	???
Gain Board	0ma – only ±12V on board +5V
Total ?	???

±12V

Main Board	0ma –no ±12V
Balanced Audio	±65ma
LPF Board	0ma –no ±12V
Gain Board	±50ma
Total	±115ma

–5V

Main Board	0ma no –5V
Balanced Audio	0ma no –5V
LPF Board	???
Gain Board	0ma no –5V
Total??	???

Copyright Matthew J. Wolf 2019.
This documentation describes Open Hardware and is licensed under the CERN OHL v. 1.2.
You may redistribute and modify this documentation under the terms of the CERN OHL v.1.2. (http://ohwr.org/cernohl). This documentation is distributed WITHOUT ANY EXPRESS OR IMPLIED WARRANTY, INCLUDING OF MERCHANTABILITY, SATISFACTORY QUALITY AND FITNESS FOR A PARTICULAR PURPOSE. Please see the CERN OHL v.1.2 for applicable conditions

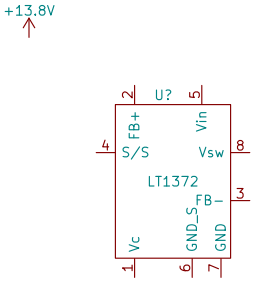

Sheet: /Power Supply/
File: Power Supply.sch

Title: Power SUpply

Size: USLetter	Date: 2016-04-27	Rev: 0.1
KiCad E.D.A		Id: 2/2