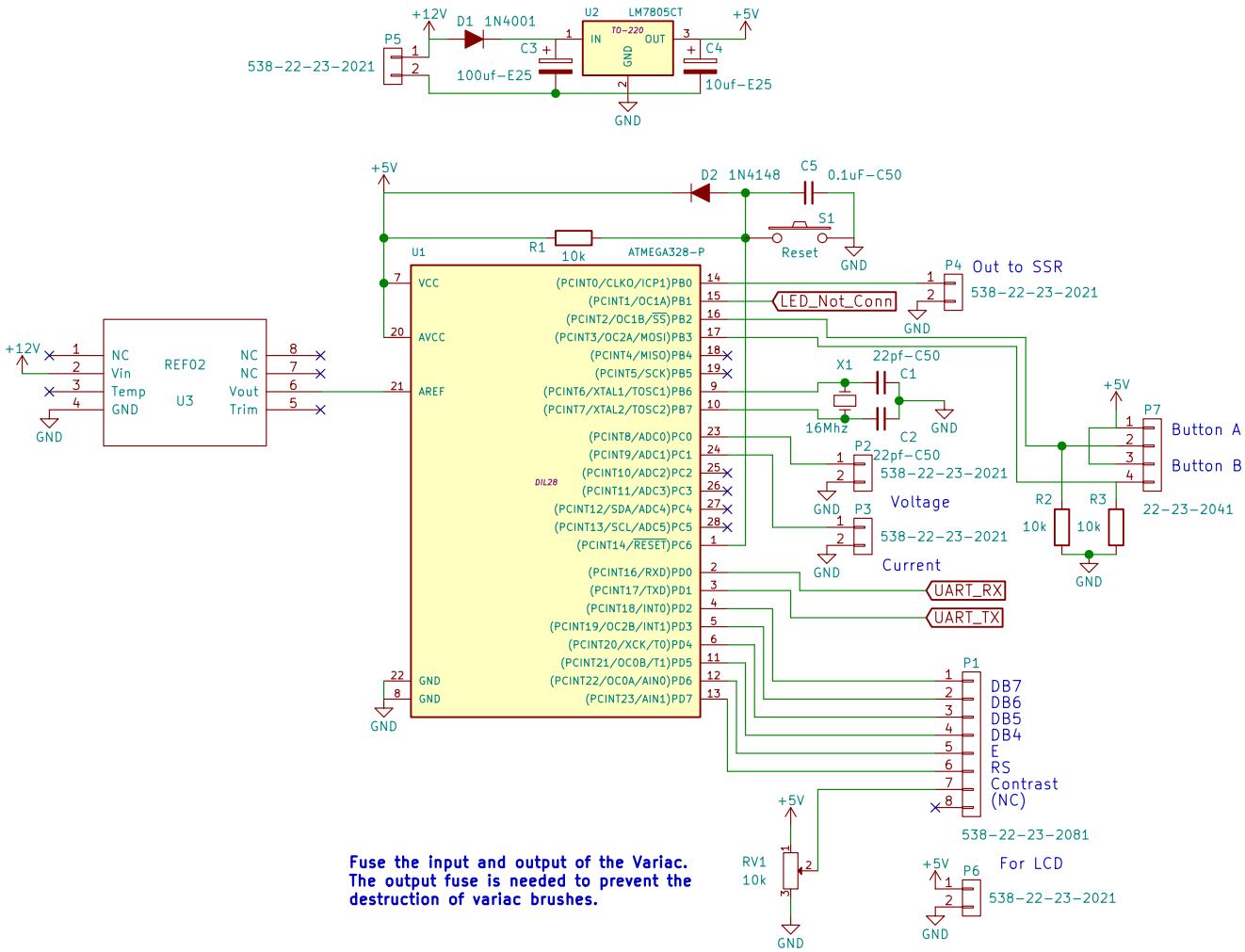

Fuse the input and output of the Variac. The output fuse is needed to prevent the destruction of variac brushes.

Atmega168 Pin Mapping

Arduino function					Arduino function
reset	(PCINT14/RESET) PC6	1	28	PC5 (ADC5/SCL/PCINT13)	analog input 5
digital pin 0 (RX)	(PCINT16/RXD) PD0	2	27	PC4 (ADC4/SDA/PCINT12)	analog input 4
digital pin 1 (TX)	(PCINT17/TXD) PD1	3	26	PC3 (ADC3/PCINT11)	analog input 3
digital pin 2	(PCINT18/INT0) PD2	4	25	PC2 (ADC2/PCINT10)	analog input 2
digital pin 3 (PWM)	(PCINT19/OC2B/INT1) PD3	5	24	PC1 (ADC1/PCINT9)	analog input 1
digital pin 4	(PCINT20/XCK/T0) PD4	6	23	PC0 (ADC0/PCINT8)	analog input 0
VCC	VCC	7	22	GND	GND
GND	GND	8	21	AREF	analog reference
crystal	(PCINT6/XTAL1/TOSC1) PB6	9	20	AVCC	VCC
crystal	(PCINT7/XTAL2/TOSC2) PB7	10	19	PB5 (SCK/PCINT5)	digital pin 13
digital pin 5 (PWM)	(PCINT21/OC0B/T1) PD5	11	18	PB4 (MISO/PCINT4)	digital pin 12
digital pin 6 (PWM)	(PCINT22/OC0A/AIN0) PD6	12	17	PB3 (MOSI/OC2A/PCINT3)	digital pin 11(PWM)
digital pin 7	(PCINT23/AIN1) PD7	13	16	PB2 (SS/OC1B/PCINT2)	digital pin 10 (PWM)
digital pin 8	(PCINT0/CLKO/ICP1) PB0	14	15	PB1 (OC1A/PCINT1)	digital pin 9 (PWM)

Digital Pins 11,12 & 13 are used by the ICSP header for MOSI, MISO, SCK connections (Atmega168 pins 17,18 & 19). Avoid low-impedance loads on these pins when using the ICSP header.

N4MTT version of the "An Experimenter's Variable Voltage Transformer" from the ARRL QEX March 2015 issue.
Two buttons where added to enable adjustable current. REF02 uesed for a 5V reference.
UART ports labeled for possible future use.

Speciosus

Sheet: /
File: Variac.sch

Title: N4MTT version of W5HEU Variac

Size: USLetter	Date: 2016-10-06	Rev: 0.3
KiCad E.D.A		Id: 1/1