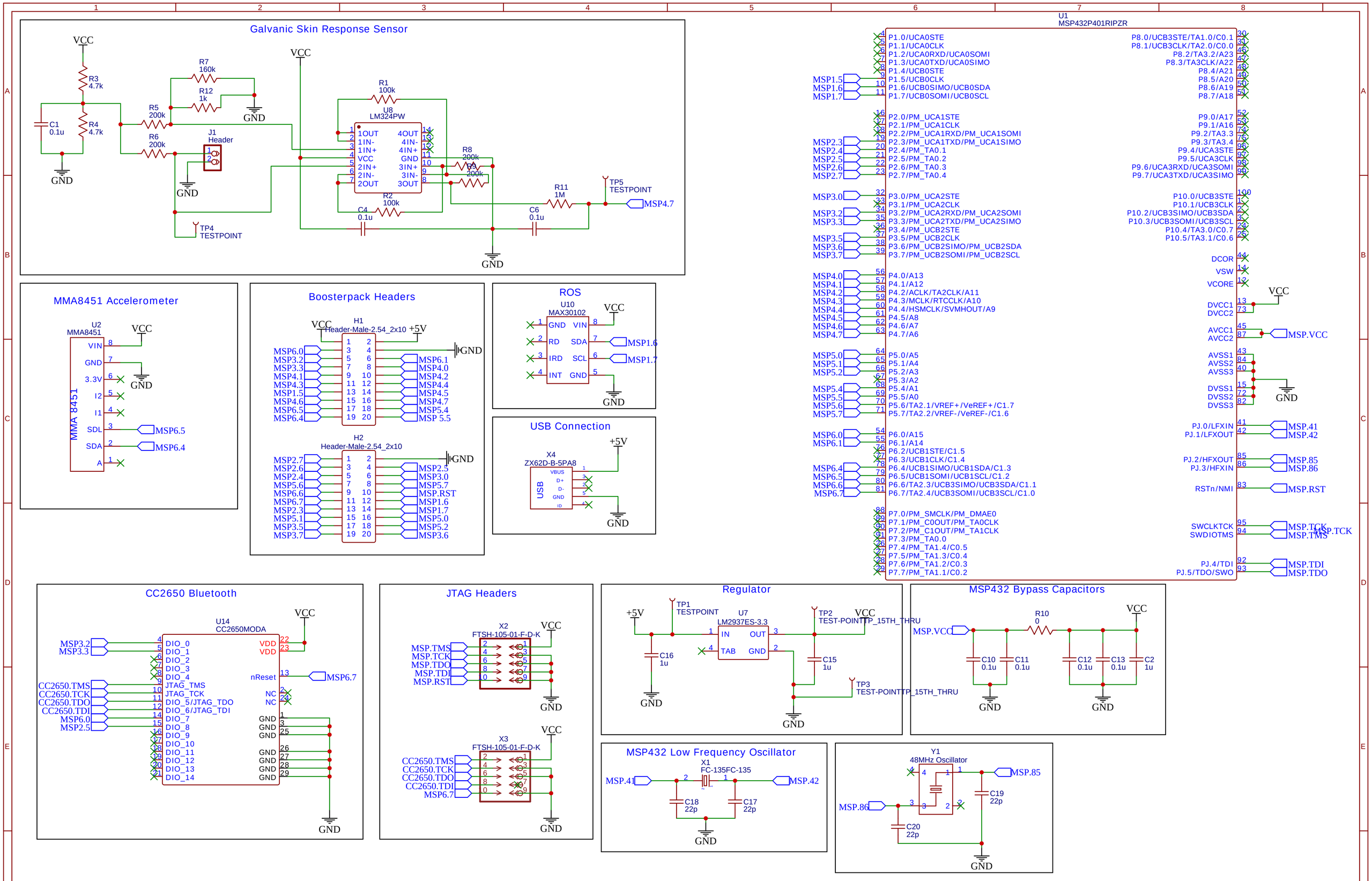

TITLE: Self-Monitor Stress System	REV: 1.0
Company: H14	Sheet: 1/1
Date: 2020-02-16	Drawn By: mbarondeau

EasyEDA