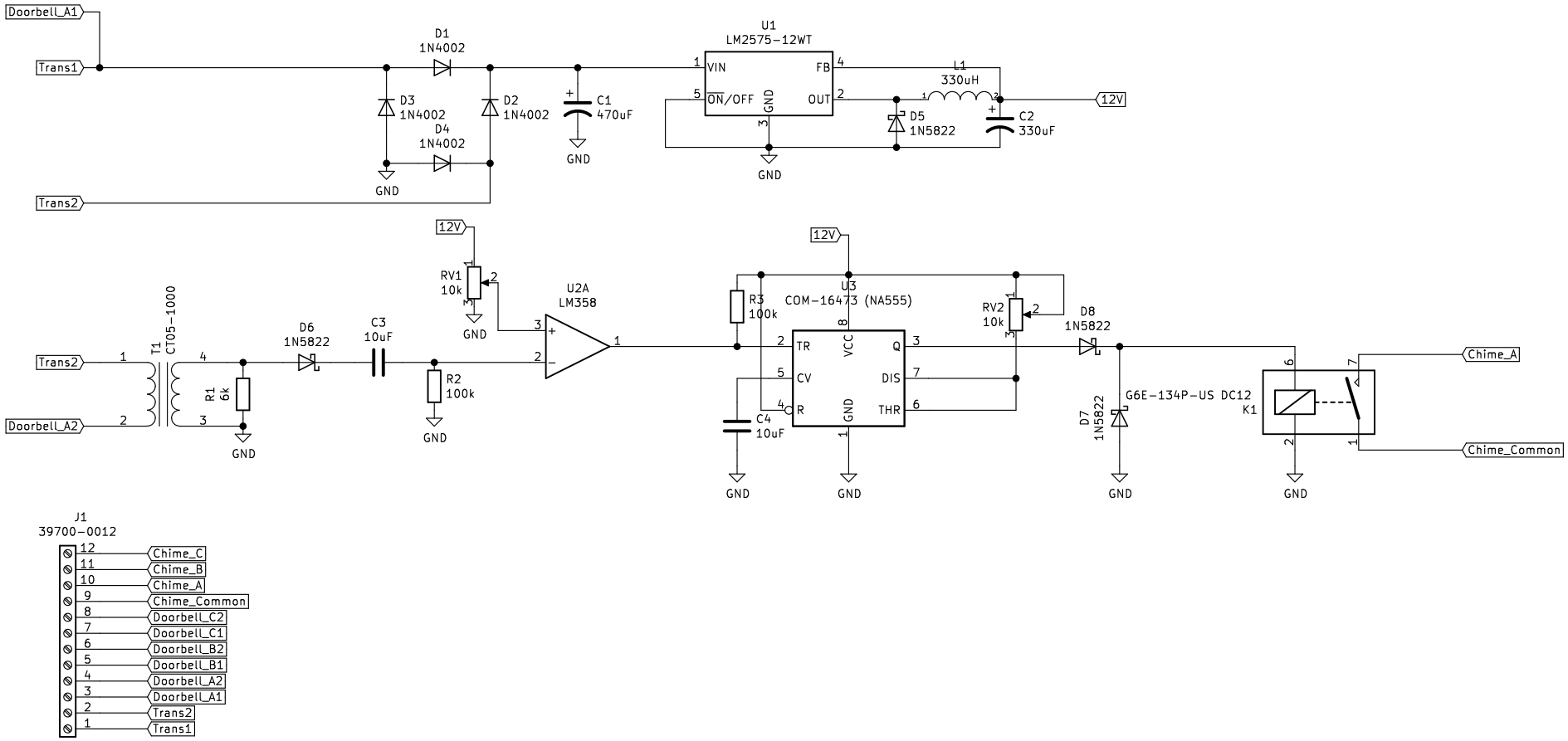

Sheet: /
File: doorbell.sch

Title: Video Doorbell Adapter

Size: A	Date: 2025-08-03	**Rev: 0.1.1**
KiCad E.D.A. kicad (5.1.5-0-10_14)		Id: 1/1