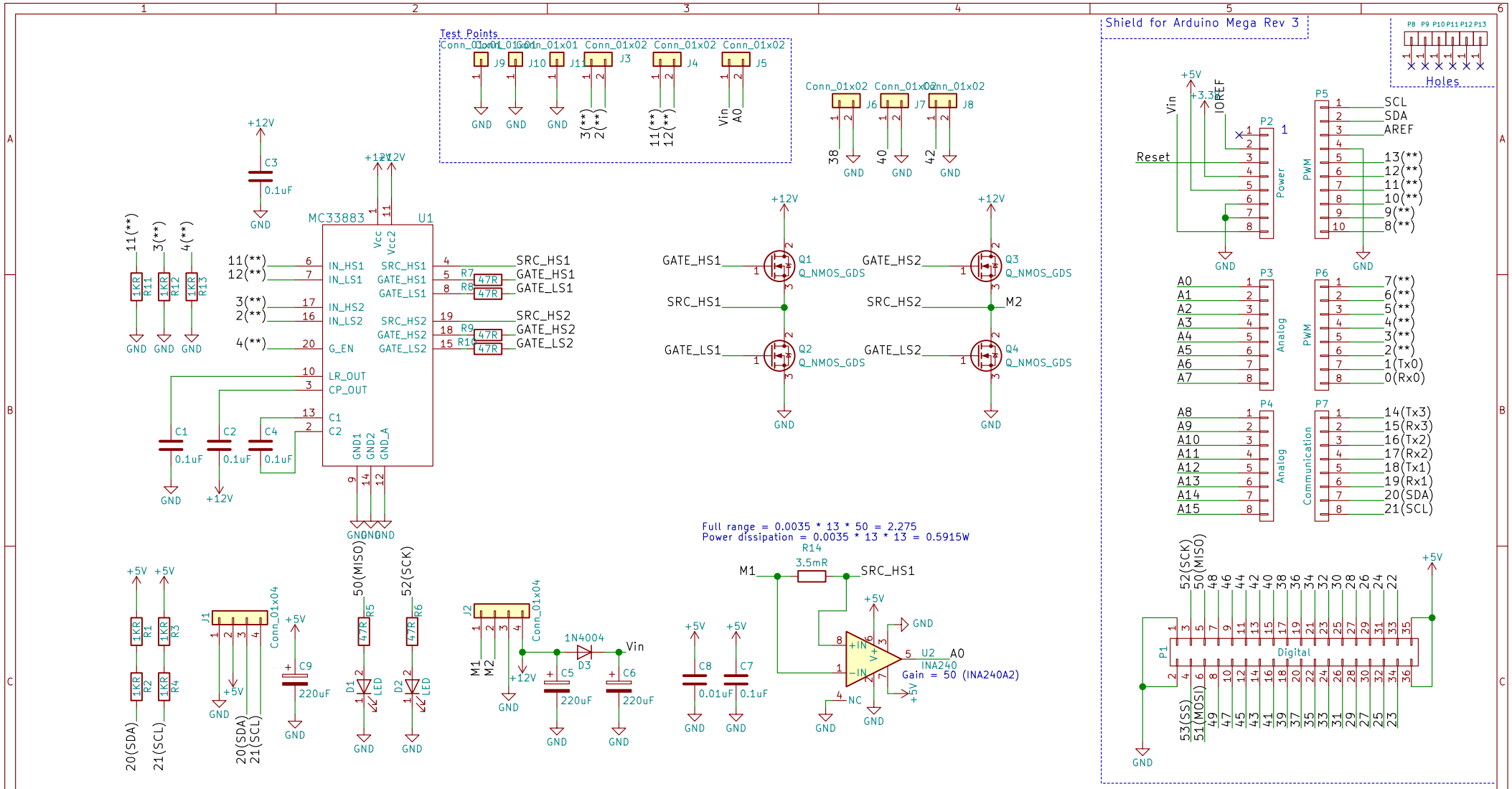

Sheet: /
File: tug.sch

Title:

Size: A4	Date: 2018-07-03	Rev:
KiCad E.D.A. kicad (5.0.0-rc2-37-ga8db21319)		Id: 1/1