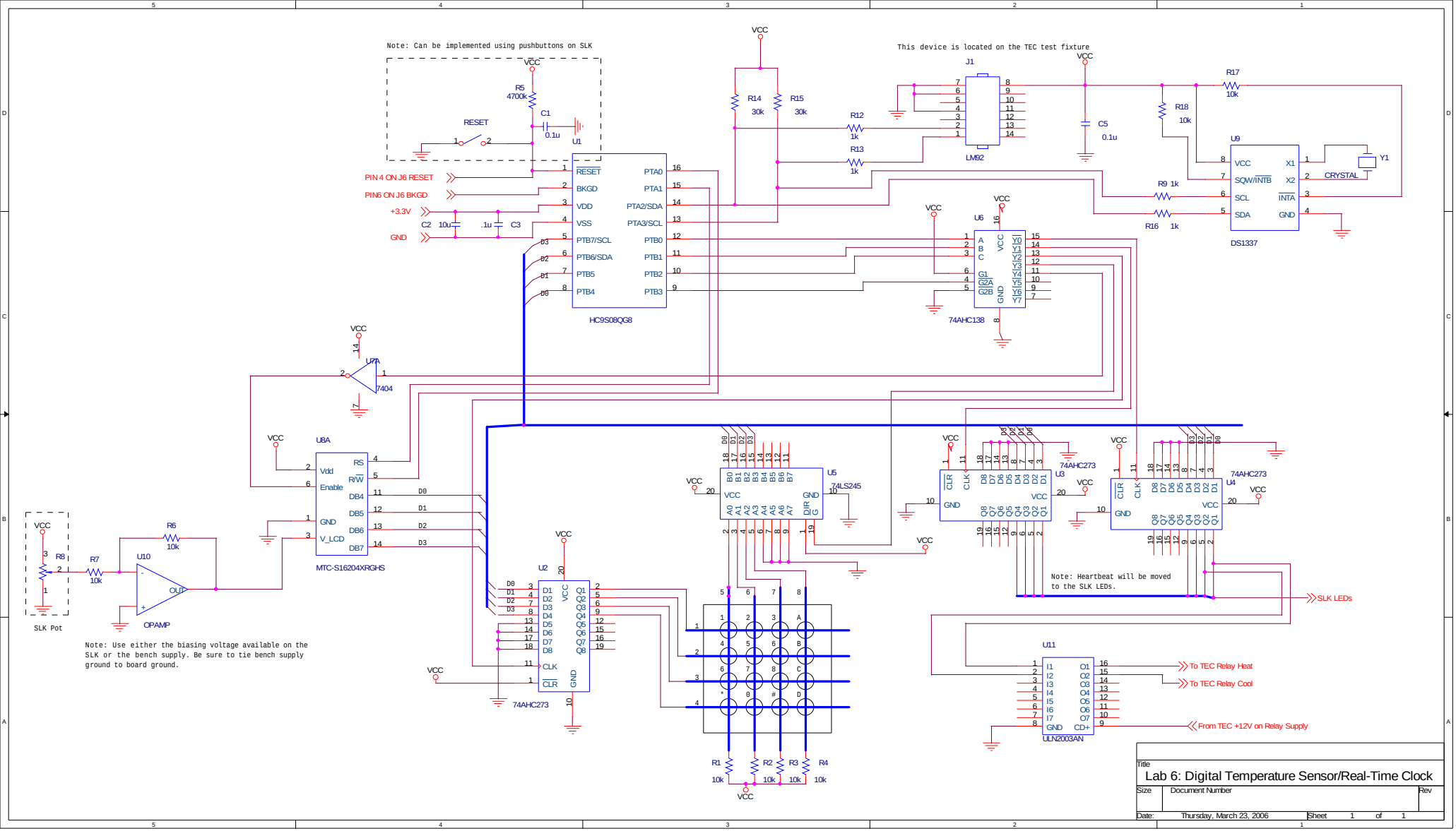


Title
Lab 6: Digital Temperature Sensor/Real-Time Clock

Size | Document Number | Rev

Date: Thursday, March 23, 2006 | Sheet 1 of 1