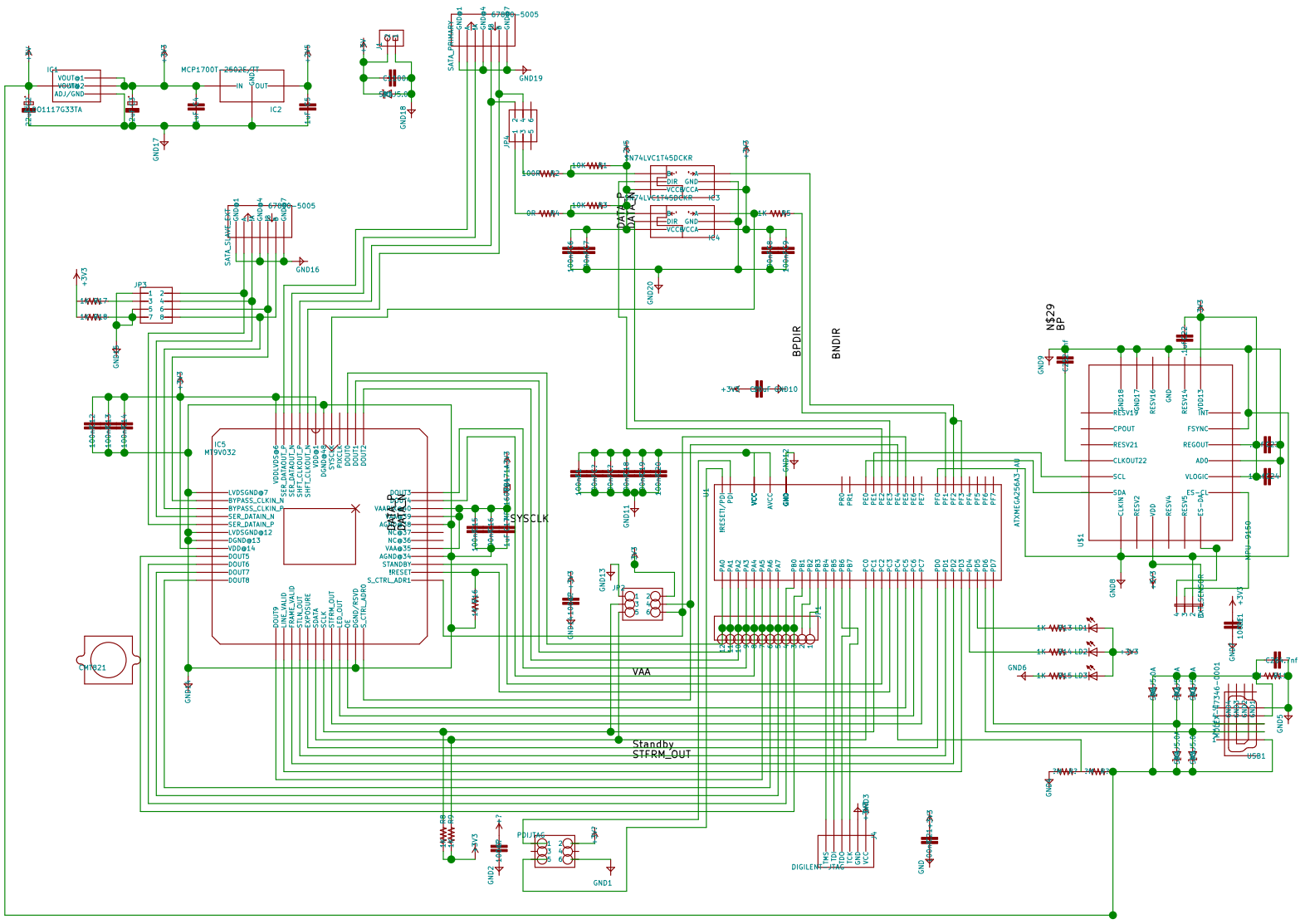

Sheet: /
File: stereo-camera-board.sch

Title: big-camera.sch

Size: A4	Date: 31 JUL 2013	Rev:
KiCad E.D.A. eeschema (2013-07-14 BZR 4242)-testing		Id: 1/1