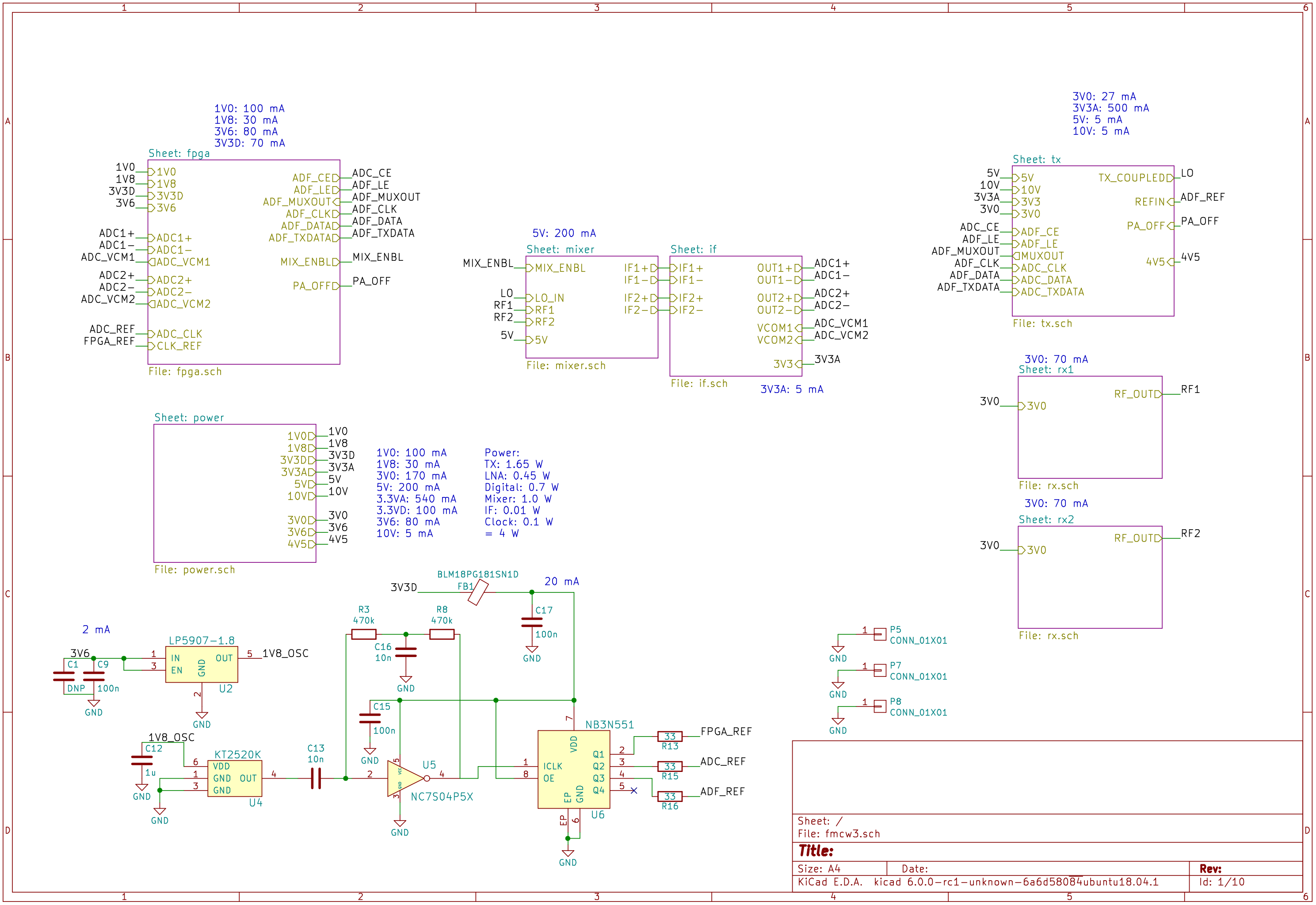
1V0: 100 mA
1V8: 30 mA
3V6: 80 mA
3V3D: 70 mA
Sheet: fpga
1V0
1V8
3V3D
3V6
ADC1+
ADC1−
ADC_VCM1
ADC2+
ADC2−
ADC_VCM2
ADC_REF
FPGA_REF
ADF_CE
ADF_LE
ADF_MUXOUT
ADF_CLK
ADF_DATA
ADF_TXDATA
MIX_ENBL
PA_OFF
File: fpga.sch
5V: 200 mA
Sheet: mixer
MIX_ENBL
LO
RF1
RF2
5V
IF1+
IF1−
IF2+
IF2−
File: mixer.sch
Sheet: if
OUT1+
OUT1−
OUT2+
OUT2−
VCOM1
VCOM2
3V3
3V3A
File: if.sch
3V3A: 5 mA
3V0: 27 mA
3V3A: 500 mA
5V: 5 mA
10V: 5 mA
Sheet: tx
5V
10V
3V3
3V0
TX_COUPLED
REFIN
4V5
MUXOUT
File: tx.sch
3V0: 70 mA
Sheet: rx1
RF_OUT
File: rx.sch
3V0: 70 mA
Sheet: rx2
File: rx.sch
Sheet: power
1V0
1V8
3V3D
3V3A
5V
10V
3V0
3V6
4V5
File: power.sch
1V0: 100 mA
1V8: 30 mA
3V0: 170 mA
5V: 200 mA
3.3VA: 540 mA
3.3VD: 100 mA
3V6: 80 mA
10V: 5 mA
Power:
TX: 1.65 W
LNA: 0.45 W
Digital: 0.7 W
Mixer: 1.0 W
IF: 0.01 W
Clock: 0.1 W
= 4 W
BLM18PG181SN1D
FB1
20 mA
C17
100n
R3
470k
R8
470k
C16
10n
C15
100n
2 mA
LP5907−1.8
IN
EN
GND
OUT
U2
1V8_OSC
C1
C9
DNP
100n
C12
1u
KT2520K
VDD
GND
OUT
U4
C13
10n
U5
NC7S04P5X
NB3N551
ICLK
OE
Q1
Q2
Q3
Q4
EP
U6
R13
R15
R16
33
FPGA_REF
ADC_REF
ADF_REF
P5
P7
P8
CONN_01X01
Sheet: /
File: fmcw3.sch
Title:
Size: A4
Date:
Rev:
KiCad E.D.A. kicad 6.0.0−rc1−unknown−6a6d58084ubuntu18.04.1
Id: 1/10

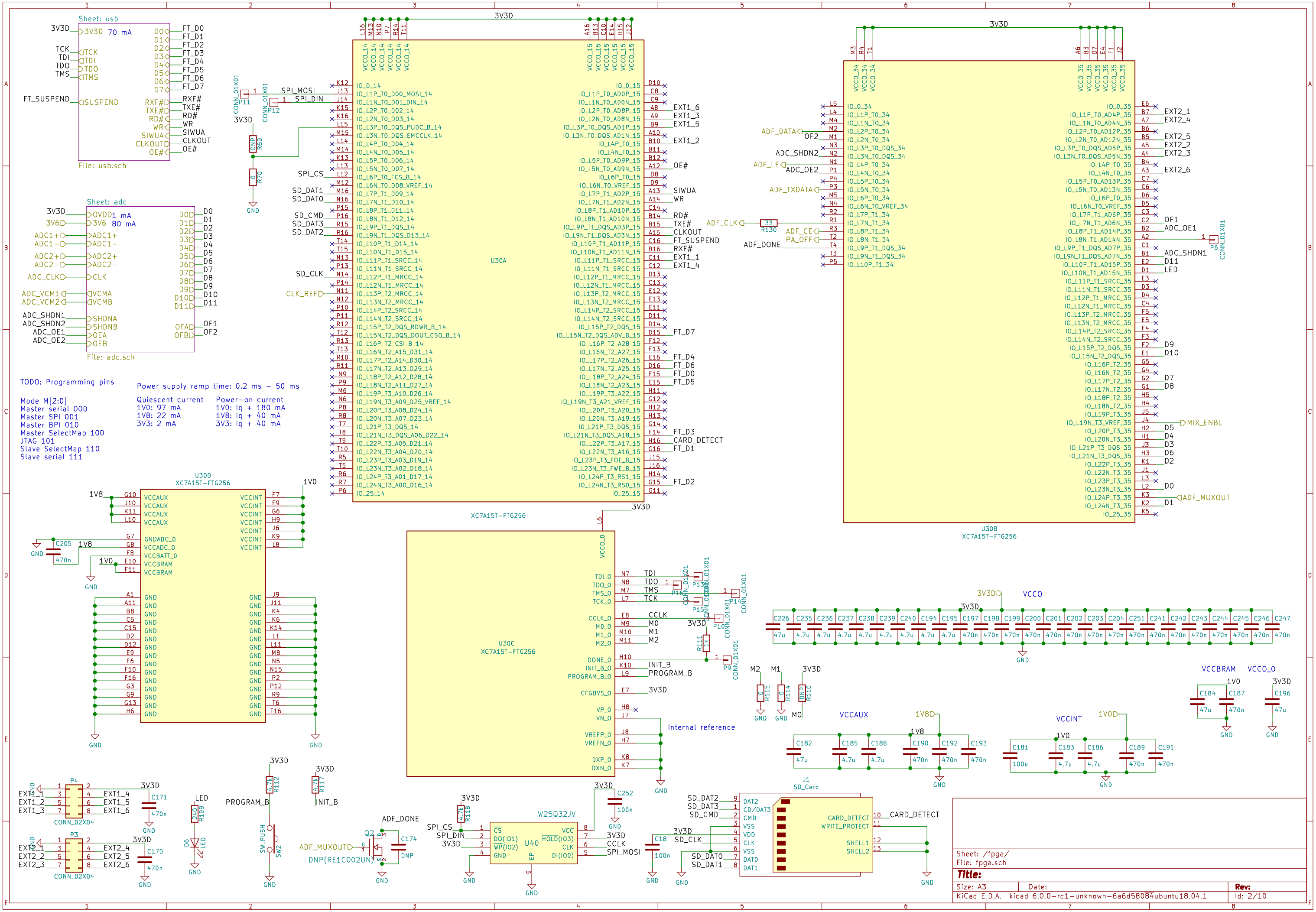
Sheet: usb
File: usb.sch
Sheet: adc
File: adc.sch
U30A
XC7A15T-FTG256
U30B
XC7A15T-FTG256
U30C
XC7A15T-FTG256
U30D
XC7A15T-FTG256
TODO: Programming pins
Mode M[2:0]
Master serial 000
Master SPI 001
Master BPI 010
Master SelectMap 100
JTAG 101
Slave SelectMap 110
Slave serial 111
Power supply ramp time: 0.2 ms - 50 ms
Quiescent current
1V0: 97 mA
1V8: 22 mA
3V3: 2 mA
Power-on current
1V0: Iq + 180 mA
1V8: Iq + 40 mA
3V3: Iq + 40 mA
Internal reference
VCCO
VCCAUX
VCCINT
VCCBRAM
VCCO_0
J1
SD_Card
W25Q32JV
U40
Sheet: /fpga/
File: fpga.sch
Title:
Size: A3
Date:
Rev:
KiCad E.D.A. kicad 6.0.0-rc1-unknown-6a6d5808 4ubuntu18.04.1
Id: 2/10

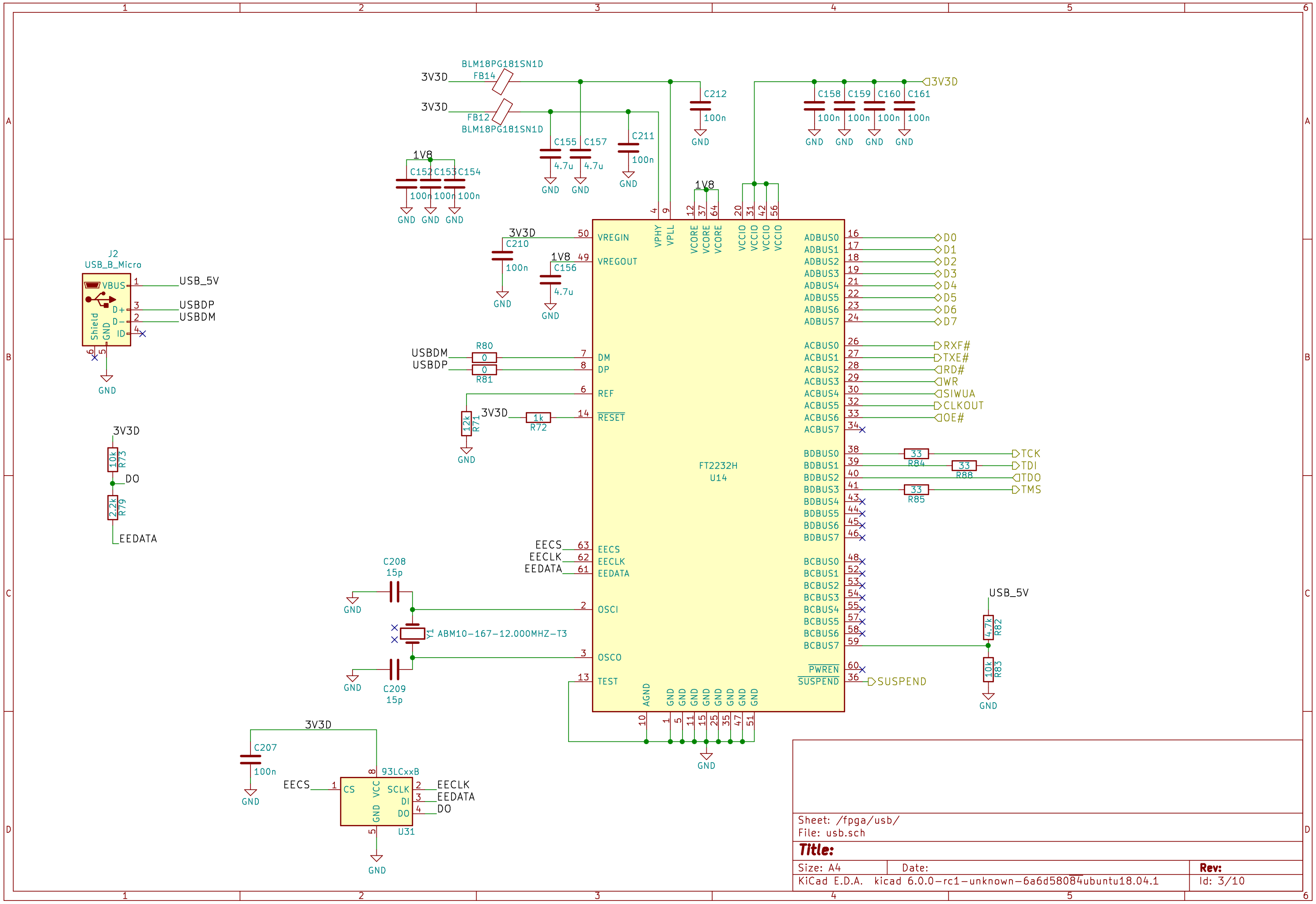

Sheet: /fpga/usb/
File: usb.sch

Title:

Size: A4	Date:	Rev:
KiCad E.D.A. kicad 6.0.0-rc1-unknown-6a6d58084ubuntu18.04.1		Id: 3/10

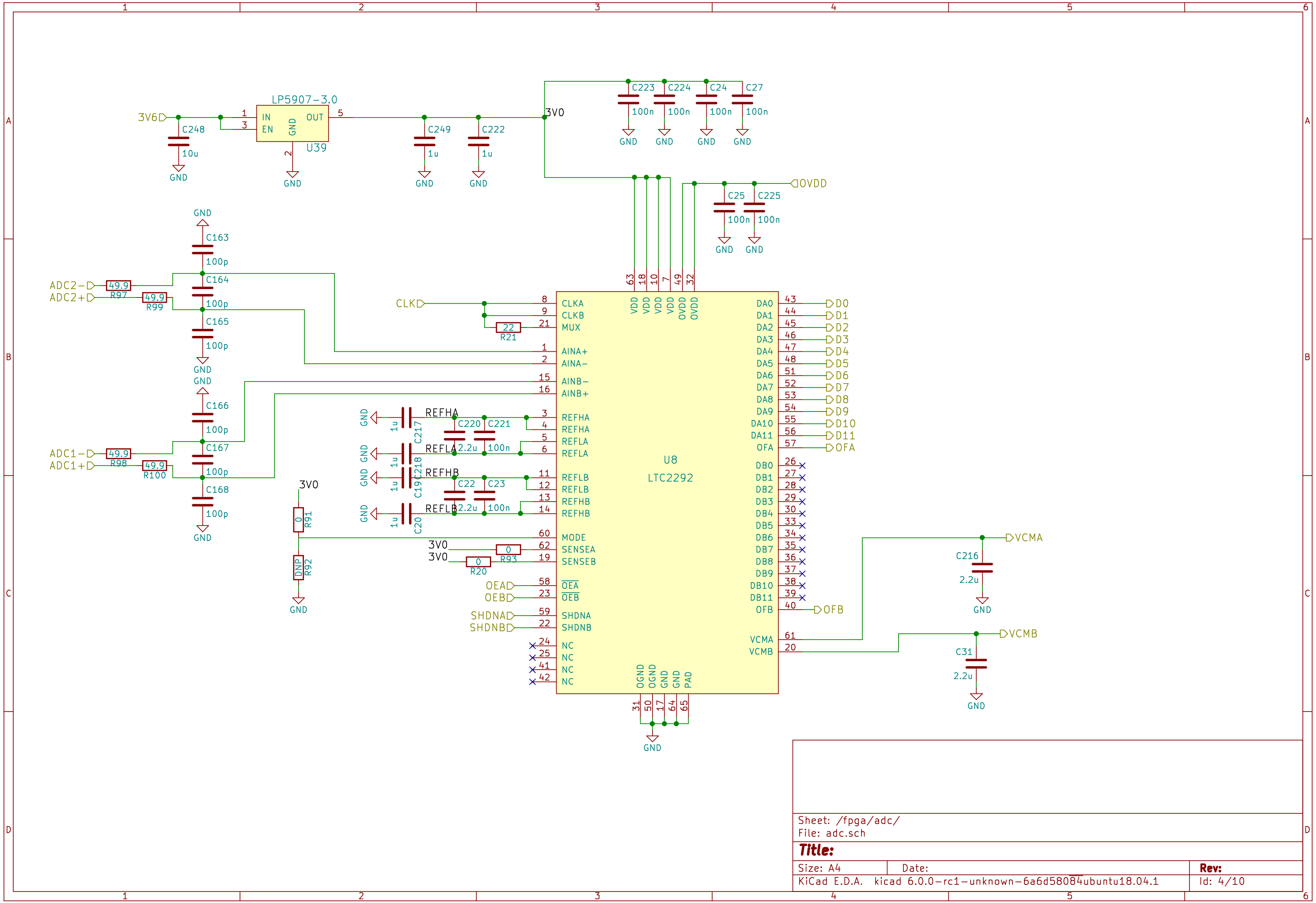

Sheet: /fpga/adc/
File: adc.sch

Title:

Size: A4	Date:	Rev:
KiCad E.D.A. kicad 6.0.0-rc1-unknown-6a6d58084ubuntu18.04.1		Id: 4/10

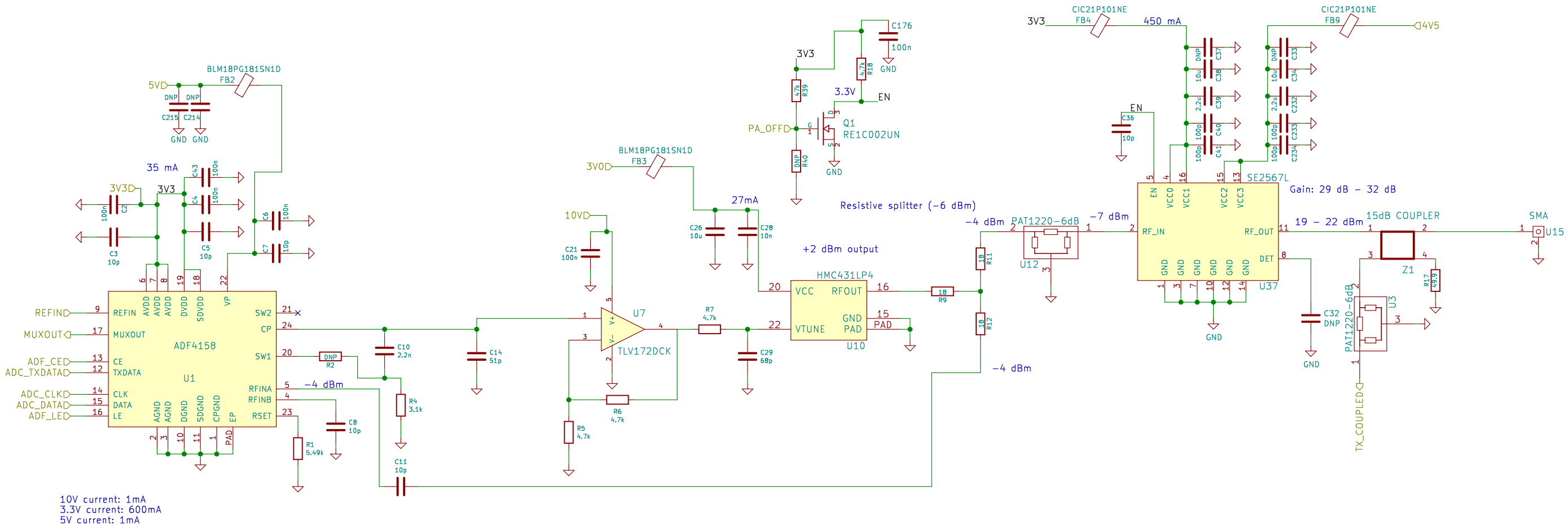

Sheet: /tx/
File: tx.sch

Title:

Size: A3	Date:	Rev:
KiCad E.D.A. kicad 6.0.0−rc1−unknown−6a6d580B4ubuntu18.04.1		Id: 5/10

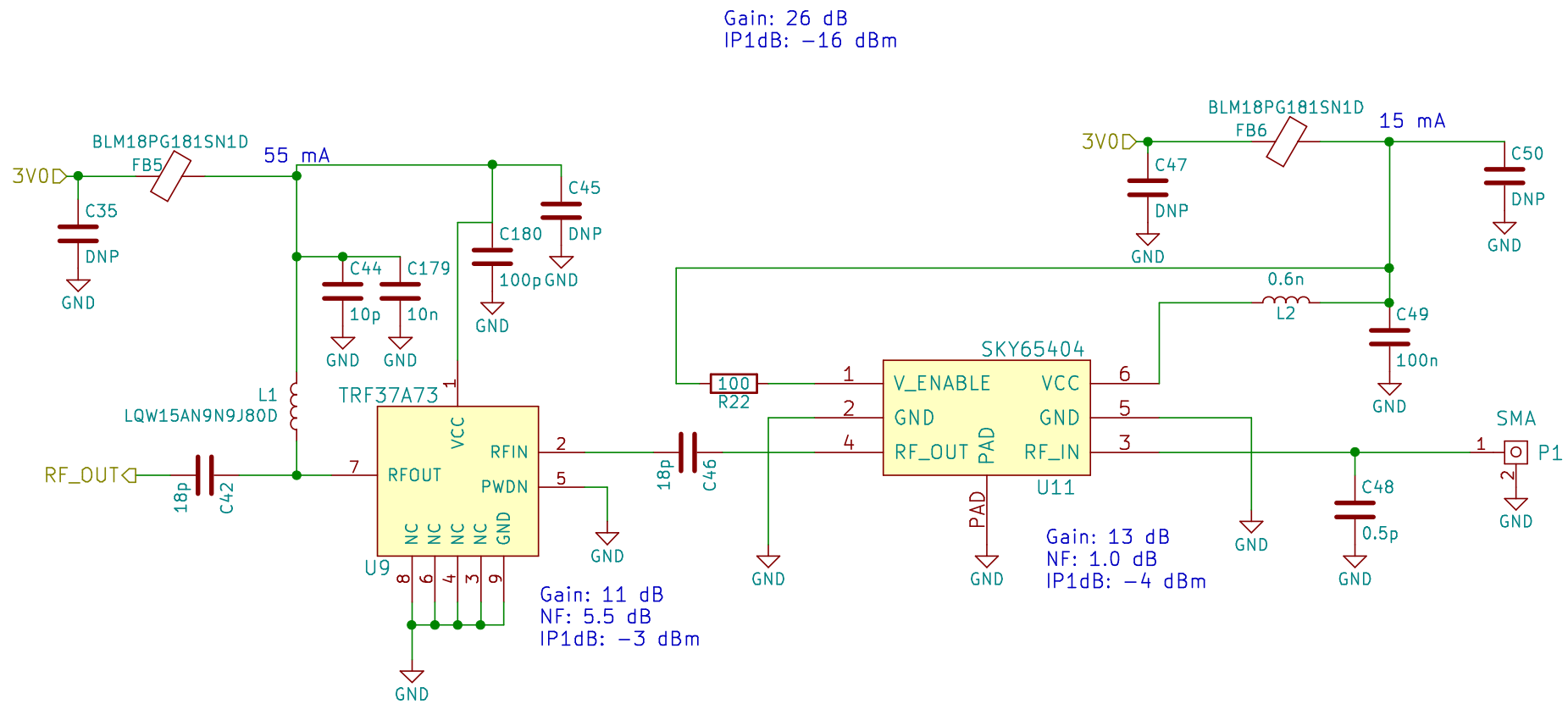

Sheet: /rx1/
File: rx.sch

Title:

Size: A4	Date:	Rev:
KiCad E.D.A. kicad 6.0.0-rc1-unknown-6a6d58084ubuntu18.04.1		Id: 6/10

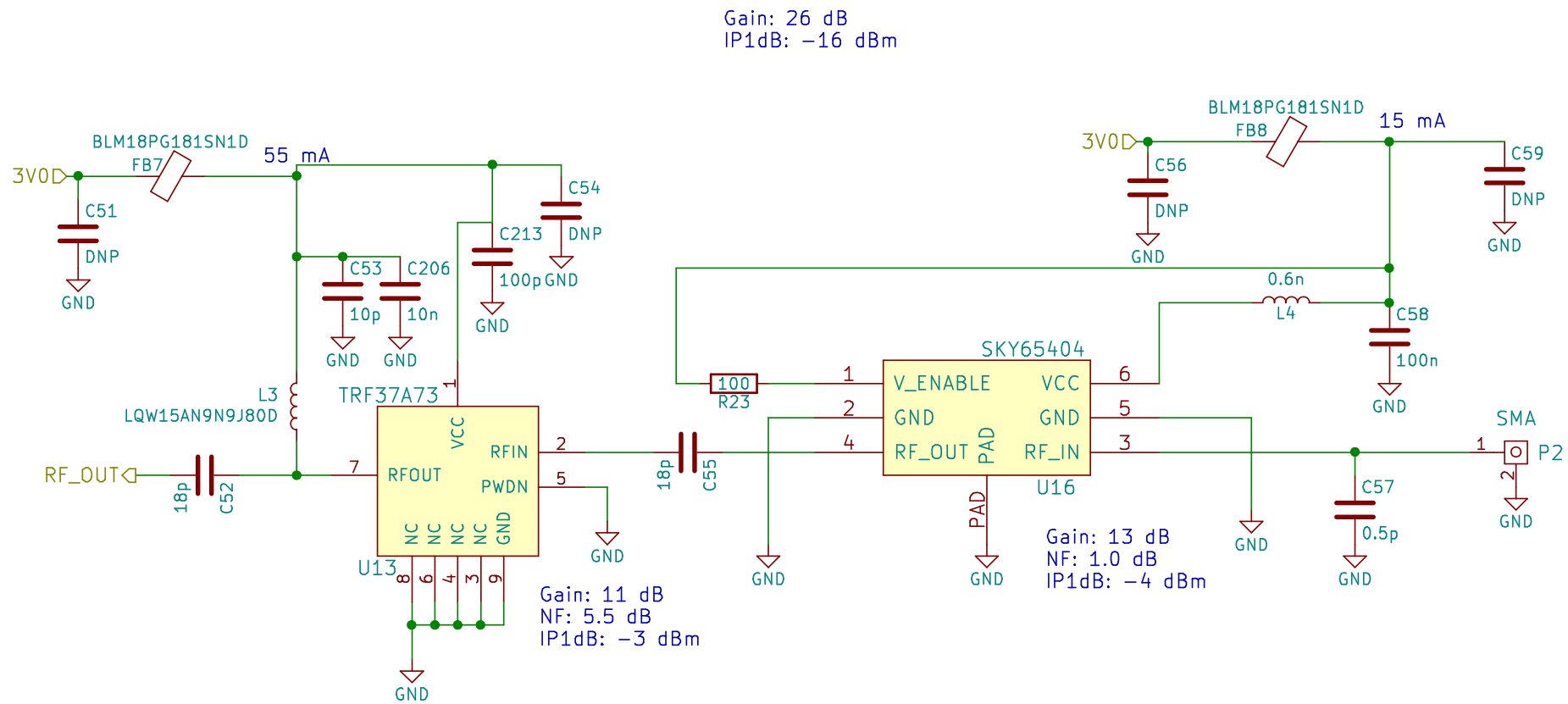

Sheet: /rx2/
File: rx.sch

Title:

Size: A4	Date:	Rev:
KiCad E.D.A. kicad 6.0.0-rc1-unknown-6a6d58084ubuntu18.04.1		Id: 7/10

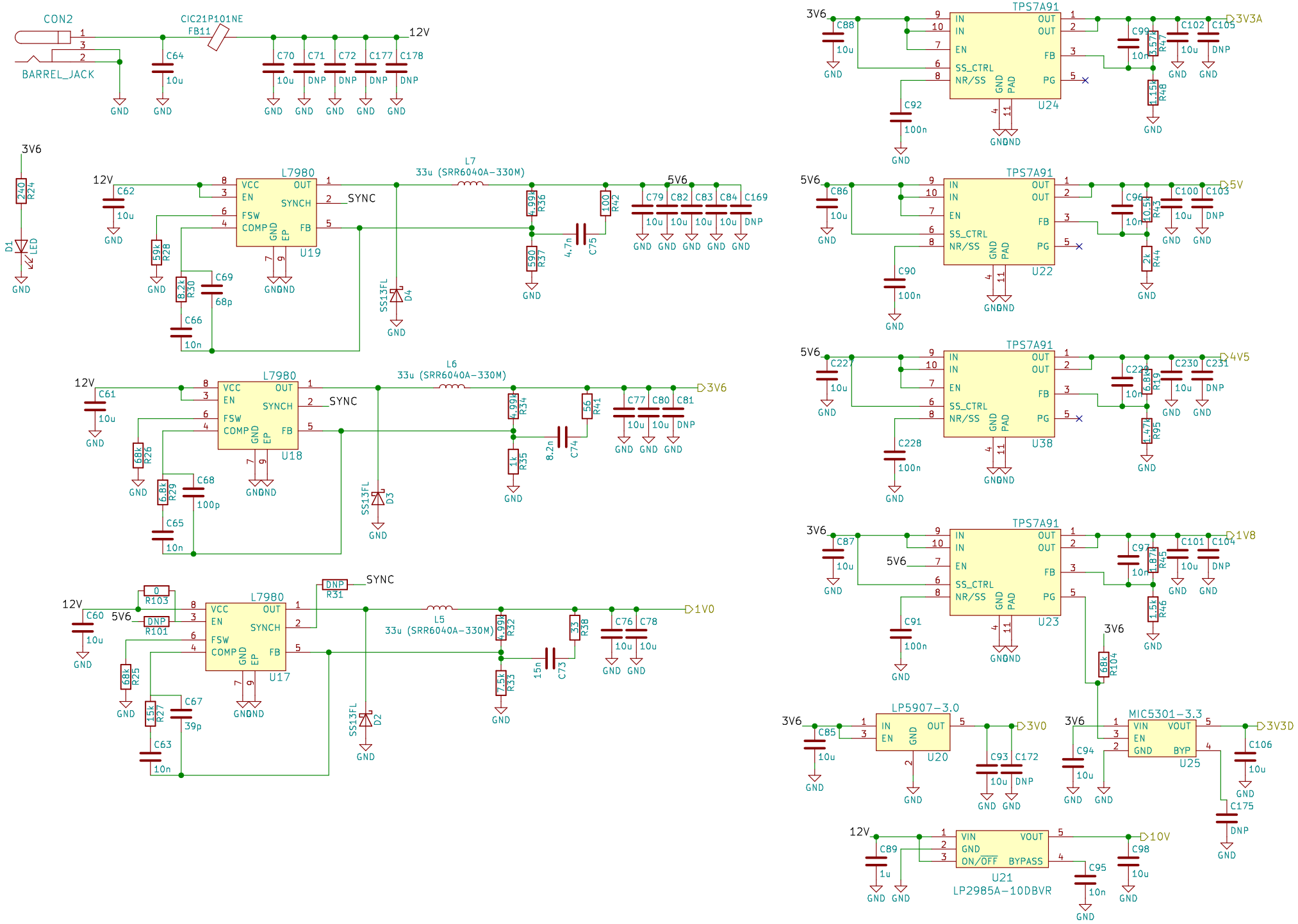

Sheet: /power/
File: power.sch

Title:

Size: A3	Date:	Rev:
KiCad E.D.A. kicad 6.0.0-rc1-unknown-6a6d58084ubuntu18.04.1		Id: 8/10

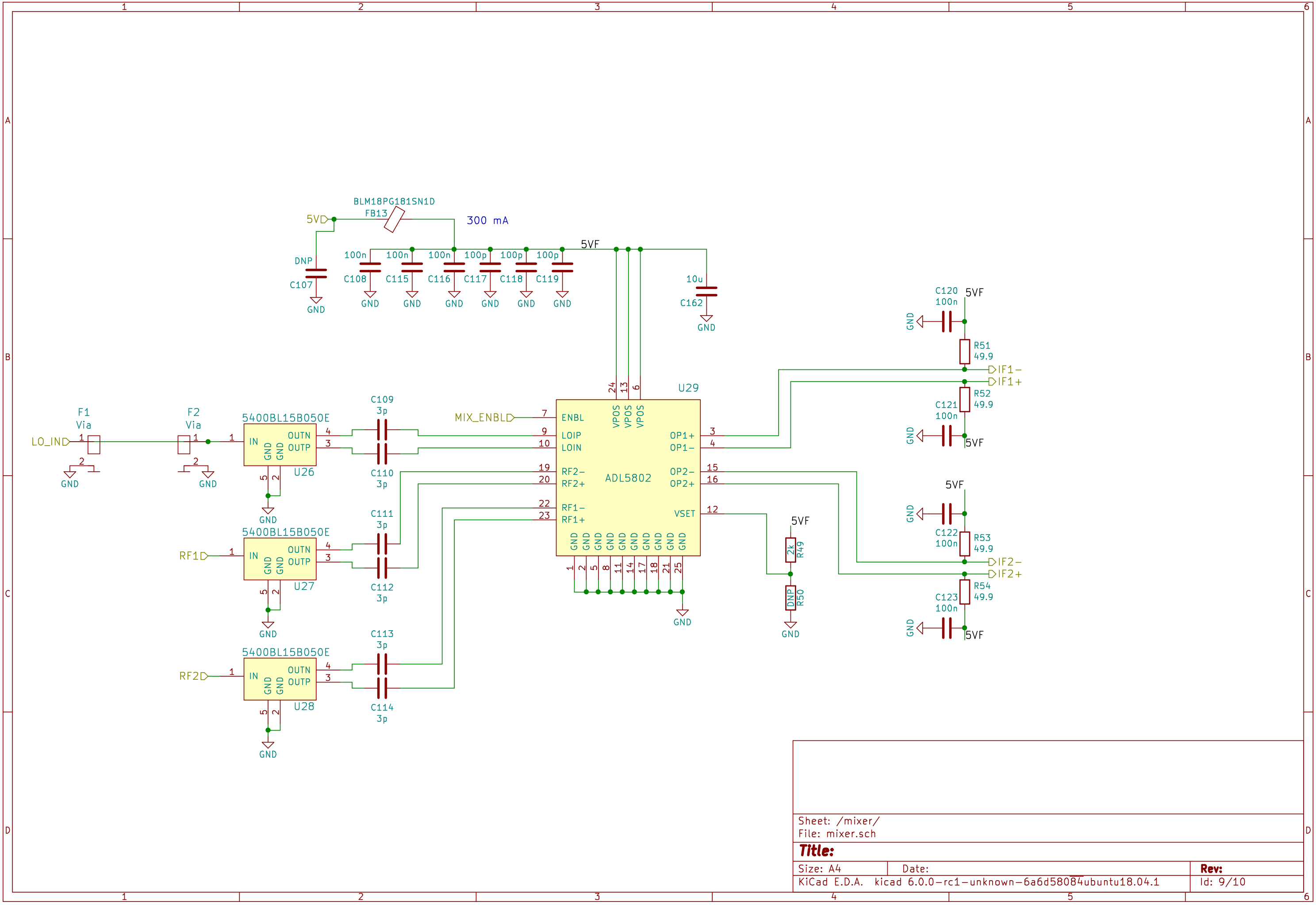

Sheet: /mixer/
File: mixer.sch

Title:

Size: A4	Date:	Rev:
KiCad E.D.A. kicad 6.0.0-rc1-unknown-6a6d58084ubuntu18.04.1		Id: 9/10

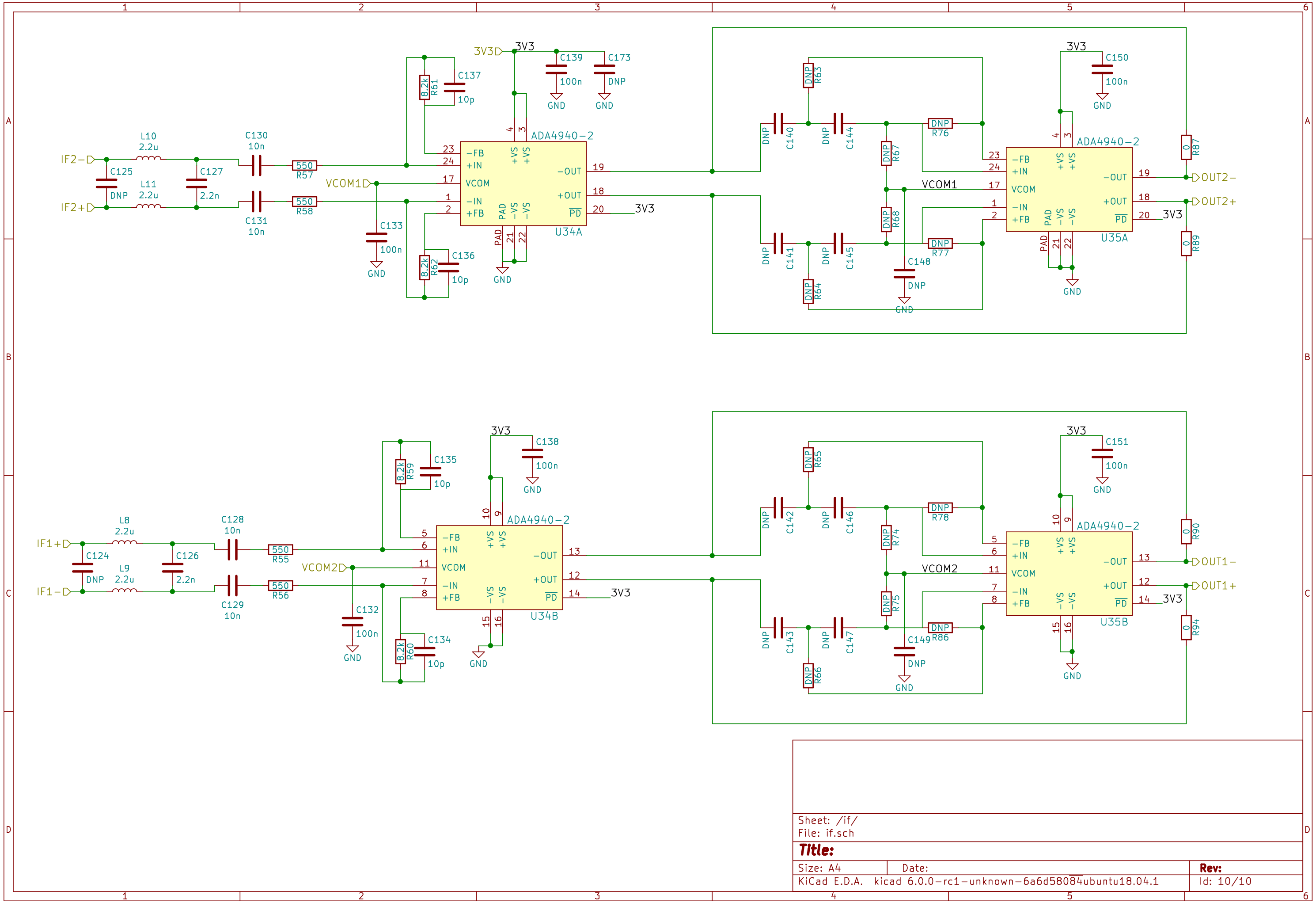

Sheet: /if/
File: if.sch

Title:

Size: A4	Date:	Rev:
KiCad E.D.A. kicad 6.0.0−rc1−unknown−6a6d58084ubuntu18.04.1		Id: 10/10