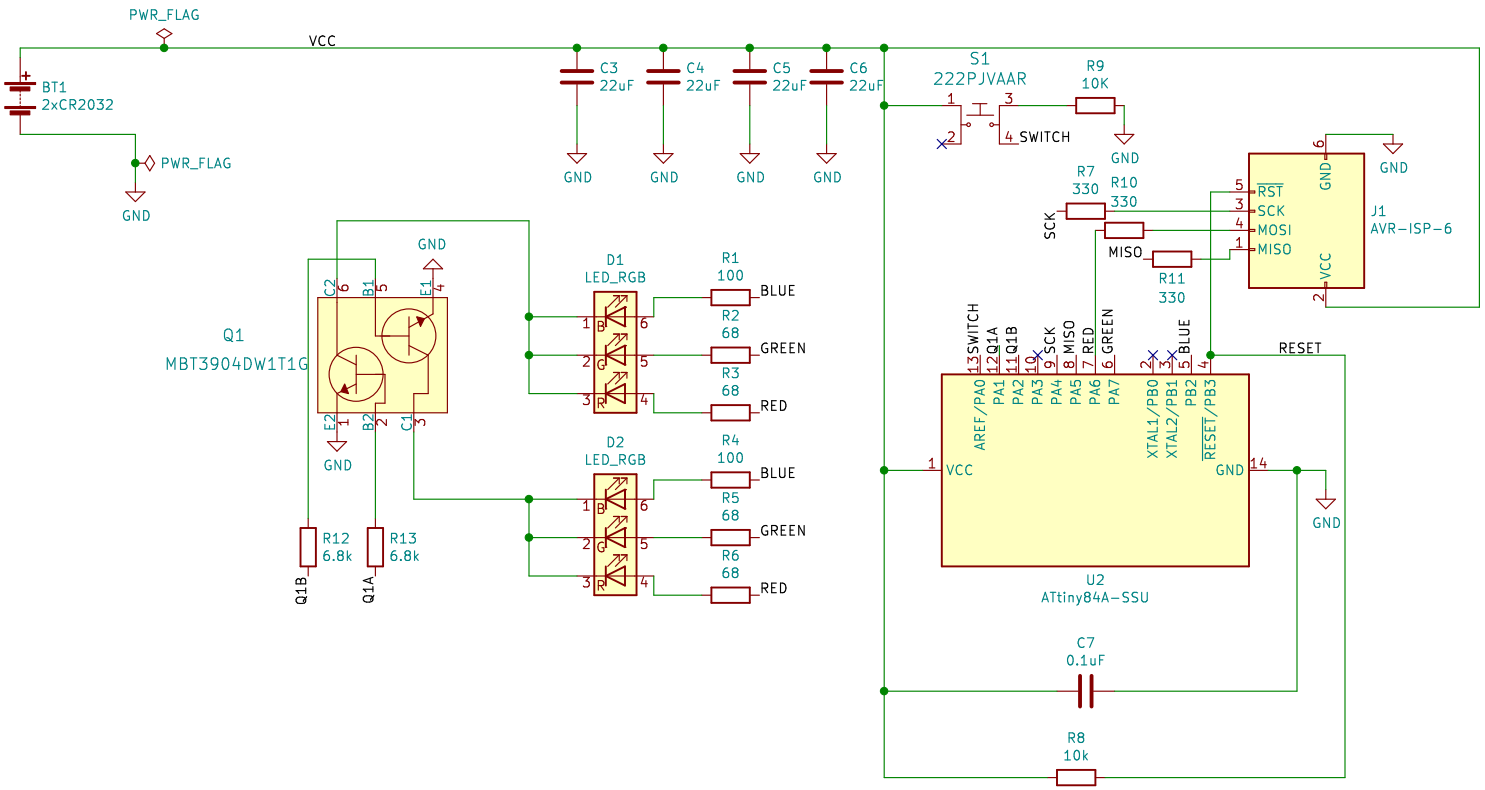

Matt Inglot

Sheet: /

File: Dog Collar Light R1.sch

Title: Dog Collar Light

Size: USLetter	Date:	**Rev: 7**
KiCad E.D.A. eeschema (5.1.7)-1		Id: 1/1