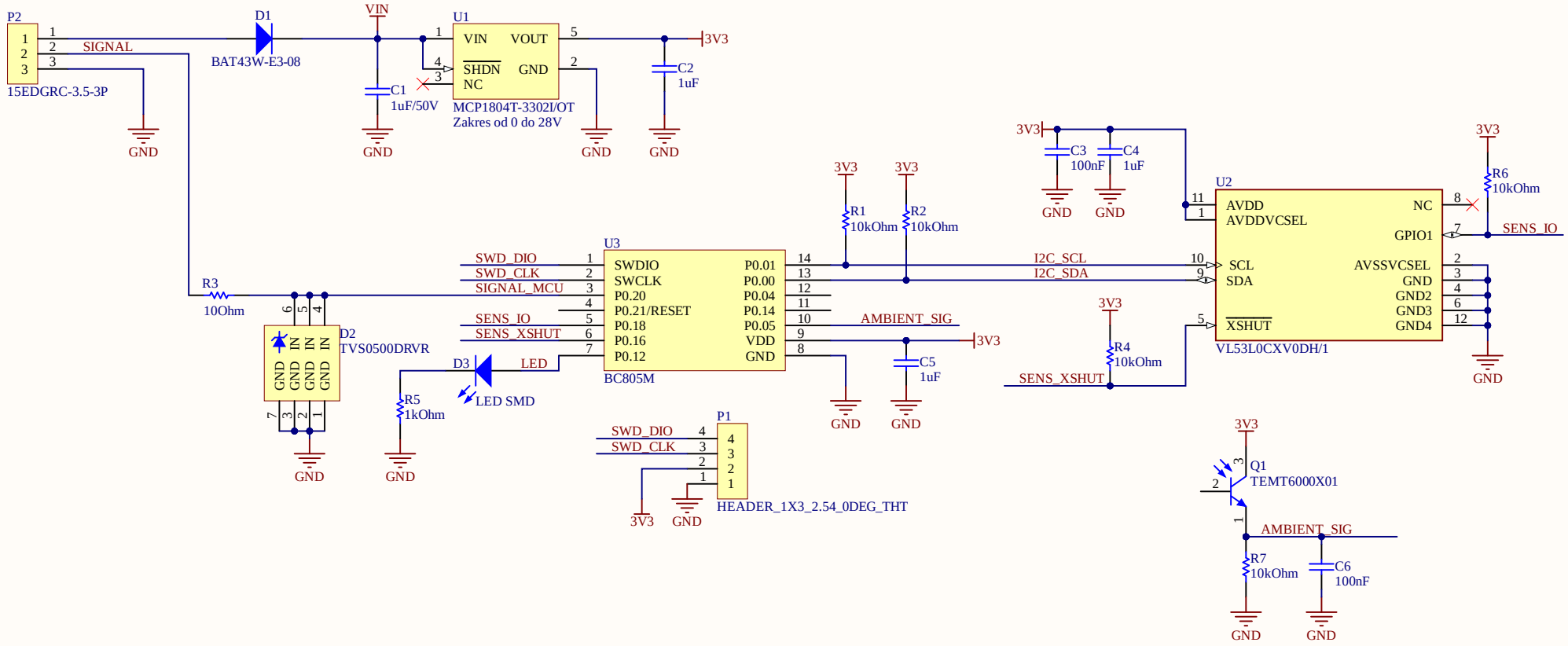

Issue date: 02.08.2023

imbue light	Author: Mateusz Gancarczyk	Sheet: 1/ 1
	Project name: **Imbuelight Move Detection**	Revision: 2.0
		Date: 02.08.2023
	Page name: Top sheet	