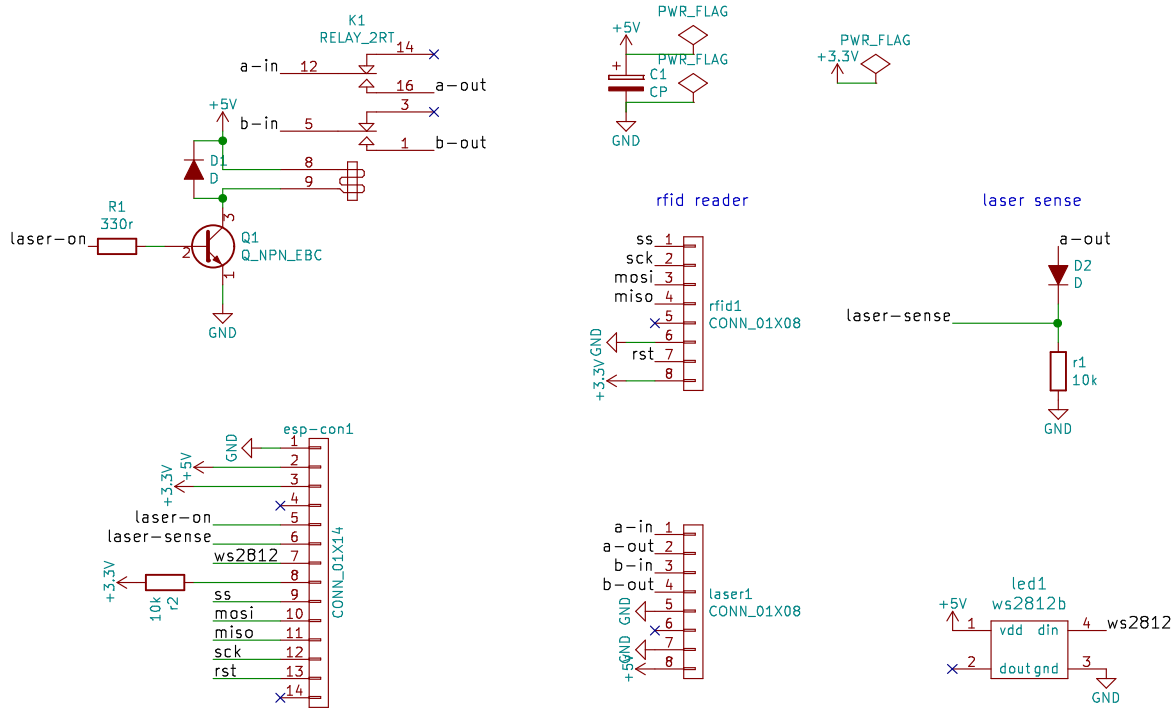

Sheet: /
File: laser-control.sch

Title:

Size: A4	Date:	Rev:
KiCad E.D.A. kicad no-vcs-found-768357ubuntu14.04.1		Id: 1/1