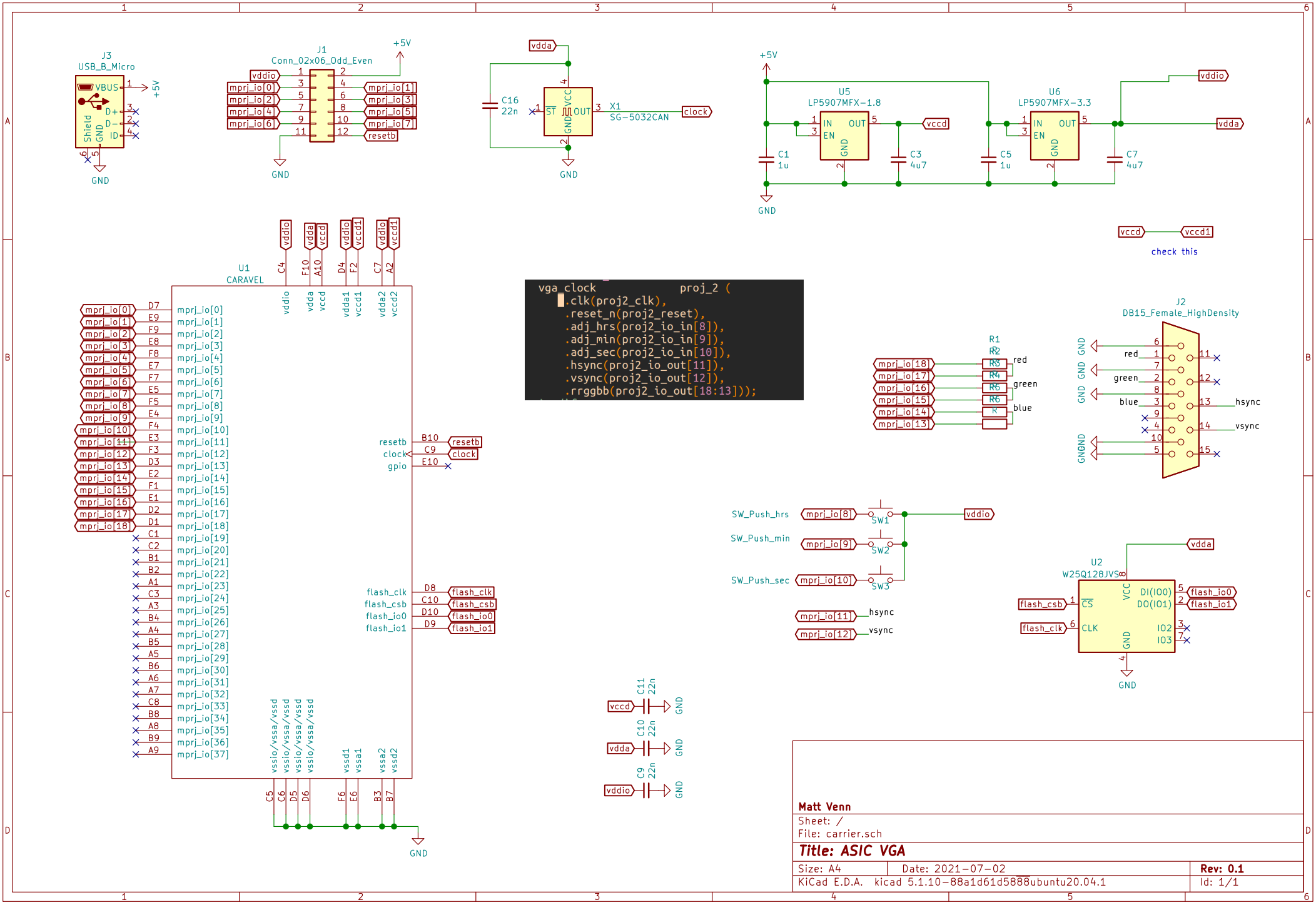

Matt Venn

Sheet: /

File: carrier.sch

Title: ASIC VGA

Size: A4	Date: 2021-07-02	Rev: 0.1
KiCad E.D.A. kicad 5.1.10-88a1d61d5888ubuntu20.04.1		Id: 1/1