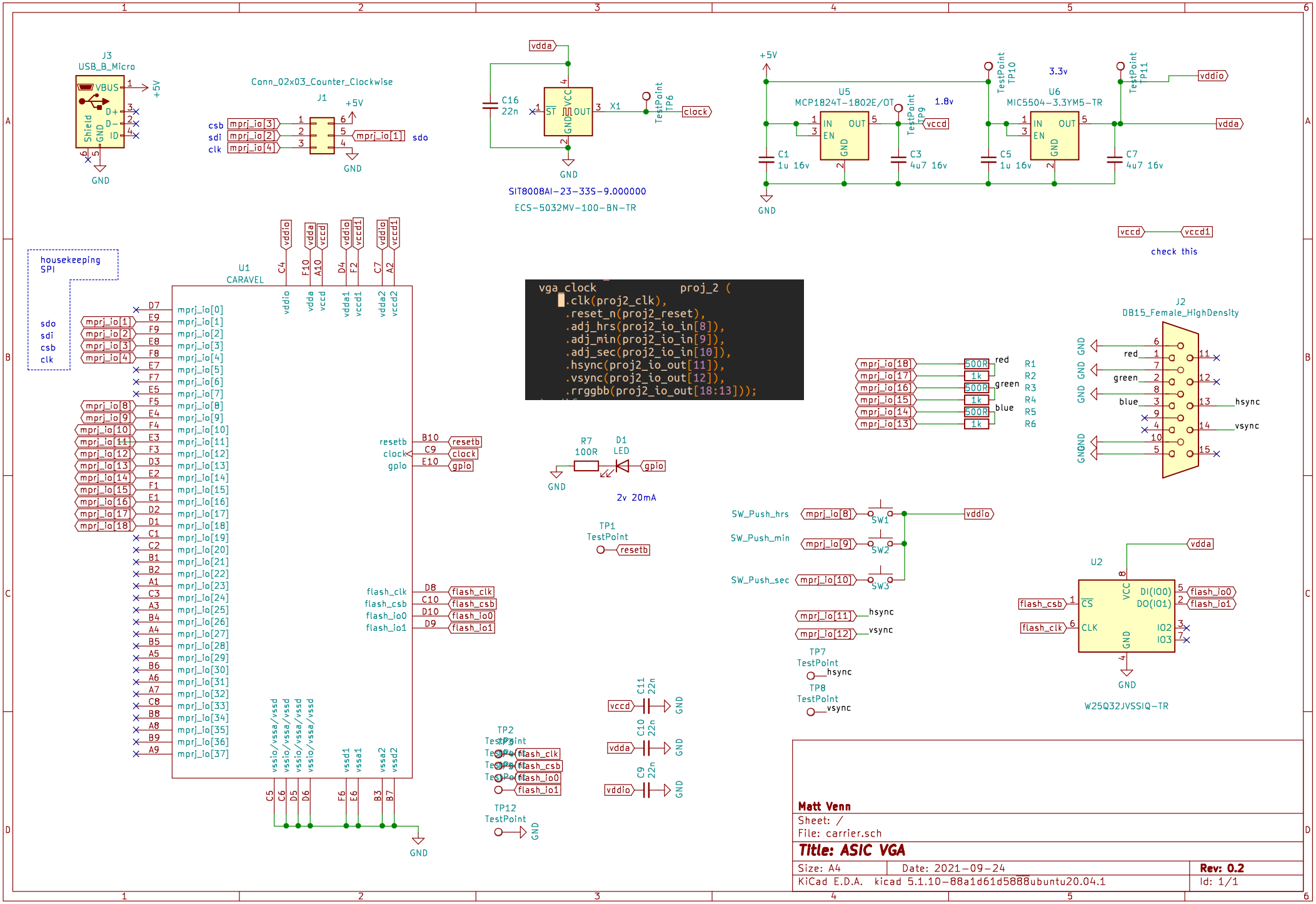
J3
USB_B_Micro
VBUS
D+
D-
ID
GND
Shield
+5V
Conn_02x03_Counter_Clockwise
J1
csb
sdi
clk
sdo
mprj_io[3]
mprj_io[2]
mprj_io[4]
mprj_io[1]
vdda
C16
22n
ST
VCC
OUT
GND
X1
TestPoint
TP6
clock
SIT8008AI-23-33S-9.000000
ECS-5032MV-100-BN-TR
+5V
U5
MCP1824T-1802E/OT
IN
EN
OUT
GND
1.8v
TestPoint
TP9
vccd
C1
1u 16v
C3
4u7 16v
TestPoint
TP10
3.3v
U6
MIC5504-3.3YM5-TR
C5
1u 16v
TestPoint
TP11
vddio
C7
4u7 16v
vccd
vccd1
check this
housekeeping
SPI
U1
CARAVEL
vddio
vdda
vccd
vdda1
vccd1
vdda2
vccd2
vssio/vssa/vssd
vssd1
vssa1
vssa2
vssd2
resetb
clock
gpio
flash_clk
flash_csb
flash_io0
flash_io1
mprj_io[0]
mprj_io[1]
mprj_io[2]
mprj_io[3]
mprj_io[4]
mprj_io[5]
mprj_io[6]
mprj_io[7]
mprj_io[8]
mprj_io[9]
mprj_io[10]
mprj_io[11]
mprj_io[12]
mprj_io[13]
mprj_io[14]
mprj_io[15]
mprj_io[16]
mprj_io[17]
mprj_io[18]
mprj_io[19]
mprj_io[20]
mprj_io[21]
mprj_io[22]
mprj_io[23]
mprj_io[24]
mprj_io[25]
mprj_io[26]
mprj_io[27]
mprj_io[28]
mprj_io[29]
mprj_io[30]
mprj_io[31]
mprj_io[32]
mprj_io[33]
mprj_io[34]
mprj_io[35]
mprj_io[36]
mprj_io[37]
GND
```
vga_clock proj_2 (
    .clk(proj2_clk),
    .reset_n(proj2_reset),
    .adj_hrs(proj2_io_in[8]),
    .adj_min(proj2_io_in[9]),
    .adj_sec(proj2_io_in[10]),
    .hsync(proj2_io_out[11]),
    .vsync(proj2_io_out[12]),
    .rrggbb(proj2_io_out[18:13]));
```
R7
100R
D1
LED
2v 20mA
TP1
TestPoint
TP2
TestPoint
TP12
TestPoint
C11
22n
C10
22n
C9
22n
J2
DB15_Female_HighDensity
red
green
blue
hsync
vsync
GND
R1
R2
R3
R4
R5
R6
500R
1k
SW_Push_hrs
SW_Push_min
SW_Push_sec
SW1
SW2
SW3
TP7
TestPoint
TP8
TestPoint
U2
W25Q32JVSSIQ-TR
CS
CLK
DI(IO0)
DO(IO1)
IO2
IO3
Matt Venn
Sheet: /
File: carrier.sch
Title: ASIC VGA
Size: A4
Date: 2021-09-24
Rev: 0.2
KiCad E.D.A. kicad 5.1.10-88a1d61d5888ubuntu20.04.1
Id: 1/1