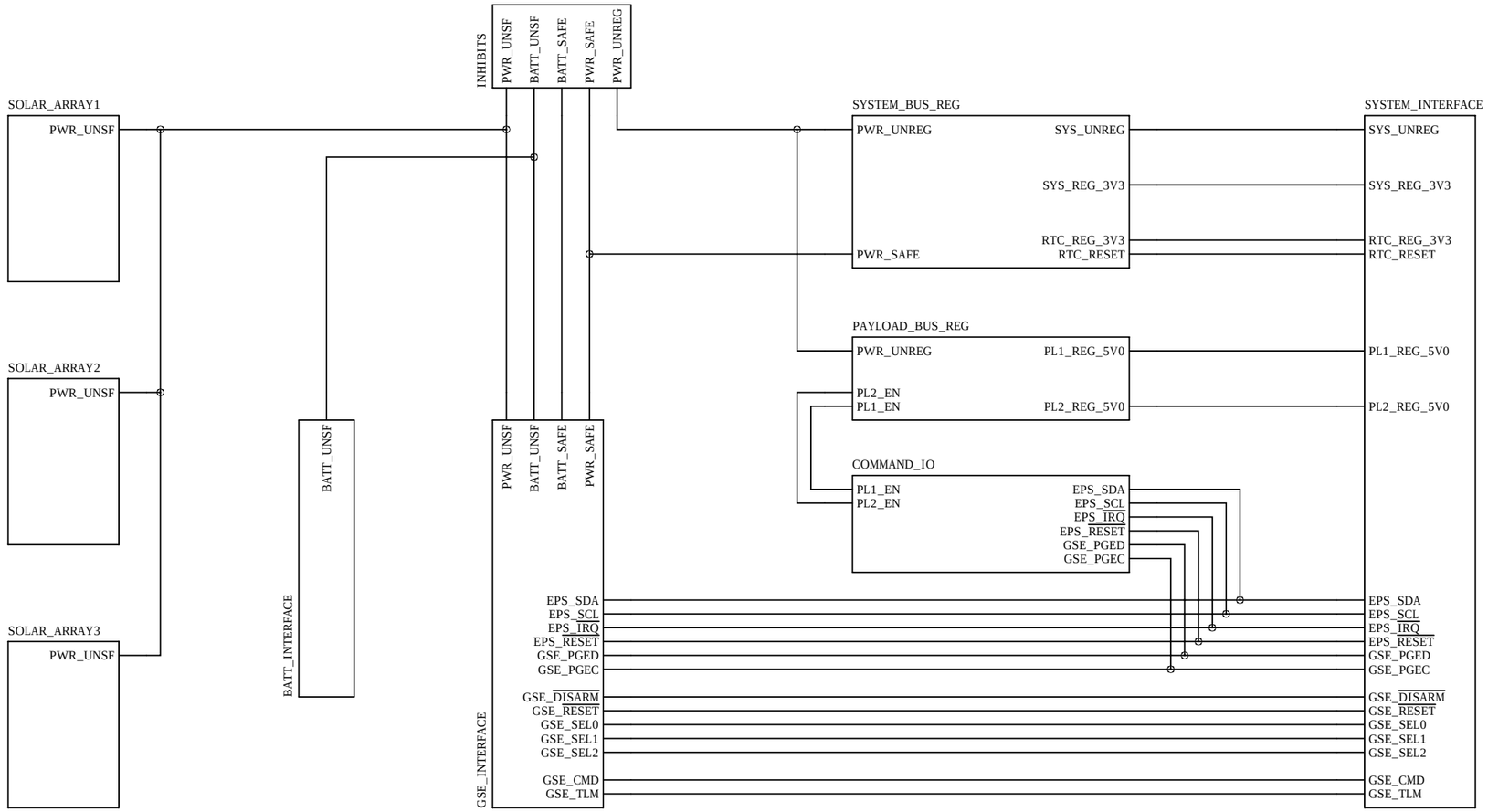


NOTES:
This page is an overview of the full circuit showing the critical connections between sheets
Each block represents a subsheet of the schematic hierarchy

| | | | |
|---|---|---|---|
| Author/RE: Matt Voll | DATED: 05/19/2016 | COMPANY: Space Science & Engineering Lab | |
| Reviewed By: | DATED: | TITLE: Phoenix EPS | |
| Reviewed By: | DATED: | DOCUMENT NO: SSEL-E-5___ | REV: 3.0 |
| Approved: | DATED: | SHEET NAME: MASTER | SIZE: B SHEET: 1 OF 13 |

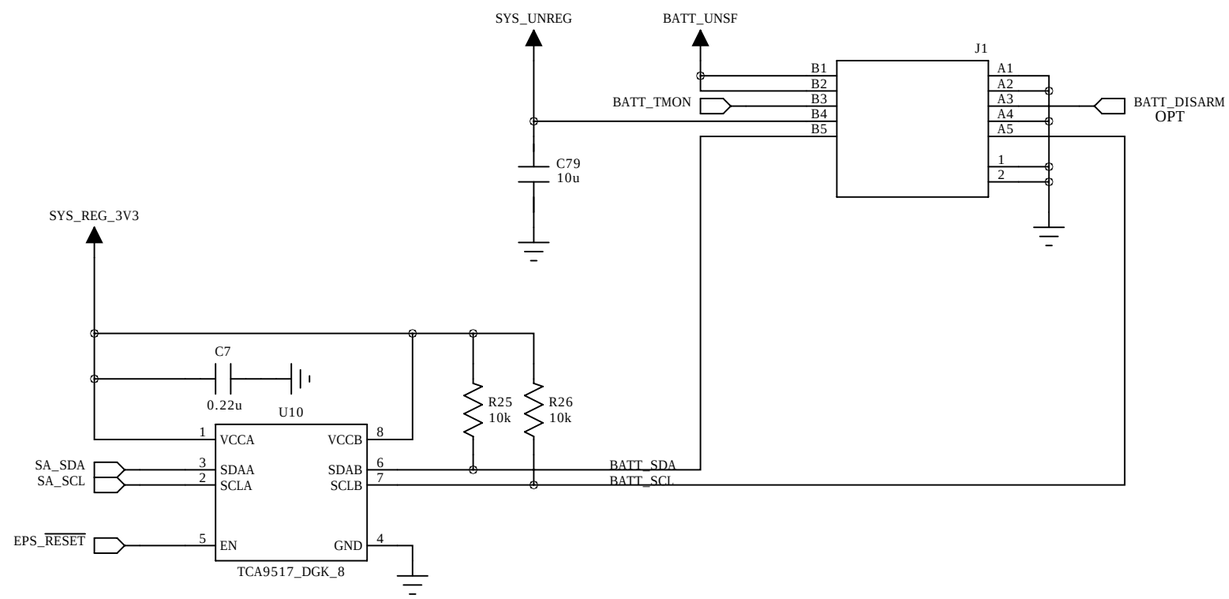


NOTES:
TCA9517 extends the I2C bus for communicating with battery gauges if implemented
SA_SDA/SCL pullup resistors are on SOLAR_ARRAY1 subsheet
Maximum capacitive load on BATT_SDA/SCL lines is 400pF
BATT_DISARM can be pulled HIGH by EGSE jumper to drive battery protection switch control
BATT_TMON can be connected to AD590s in parallel to measure average battery temperature

| | | | |
|---|---|---|---|
| Author/RE: Matt Voll | DATED: 05/19/2016 | COMPANY: Space Science & Engineering Lab | |
| Reviewed By: | DATED: | TITLE: Phoenix EPS | |
| Reviewed By: | DATED: | DOCUMENT NO: SSEL-E-5___ | REV: 3.0 |
| Approved: | DATED: | SHEET NAME: BATT_INTERFACE | SIZE: B SHEET: -1 OF 13 |

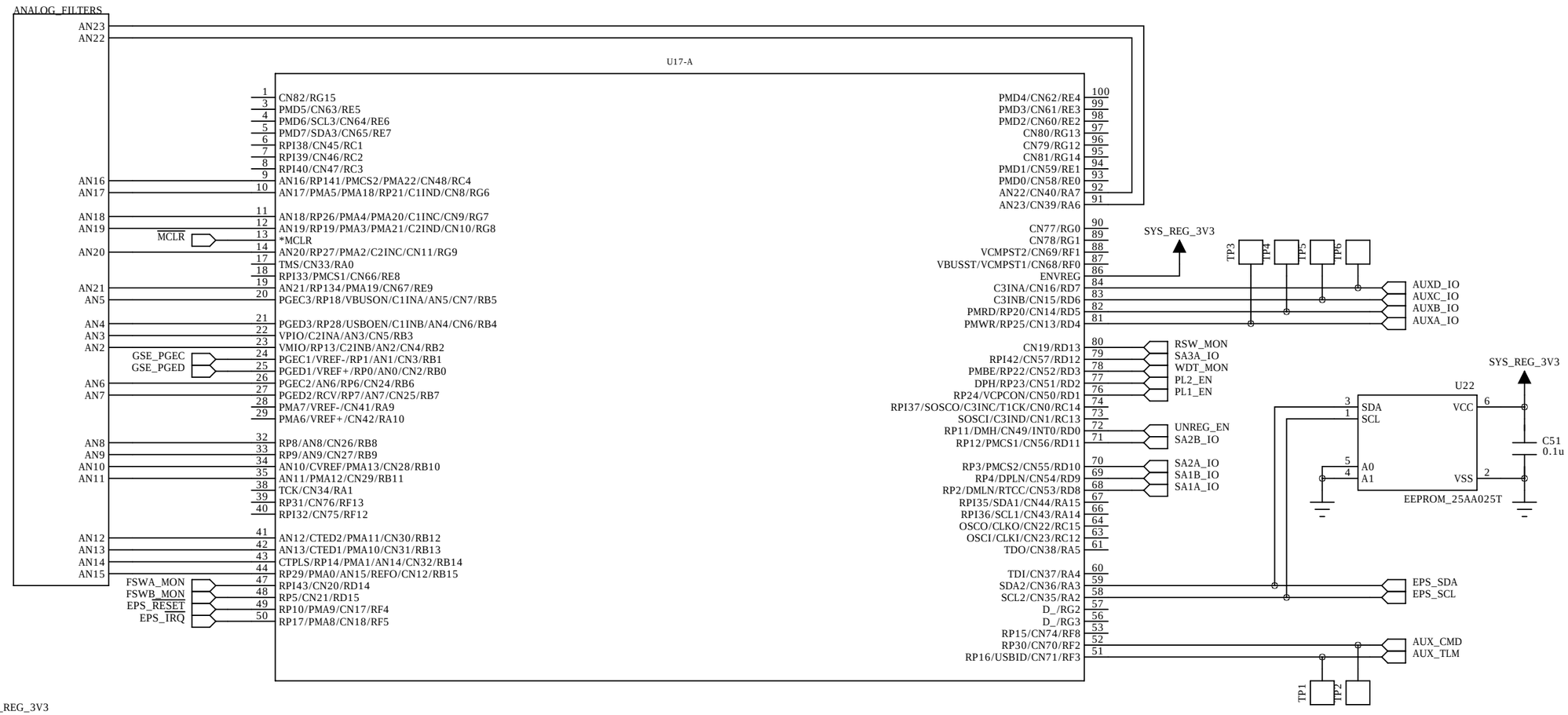


NOTES:

EPS_SDA/SCL pullup resistors are on SYSTEM_INTERFACE subsheet

I2C EEPROM or silicon serial number device is optional (pinout is compatible with both)

SA IO's can be used to enable the solar cell experiment and antenna deployment circuit

EPS_RESET is tied to an RP input for potential use as a software reset on the PIC24

| | | | |
|---|---|---|---|
| Author/RE: Matt Voll | DATED: 05/19/2016 | COMPANY: Space Science & Engineering Lab | |
| Reviewed By: | DATED: | TITLE: Phoenix EPS | |
| Reviewed By: | DATED: | DOCUMENT NO: SSEL-E-5___ | REV: 3.0 |
| Approved: | DATED: | SHEET NAME: COMMAND_IO | SIZE: B SHEET: -1 OF 13 |

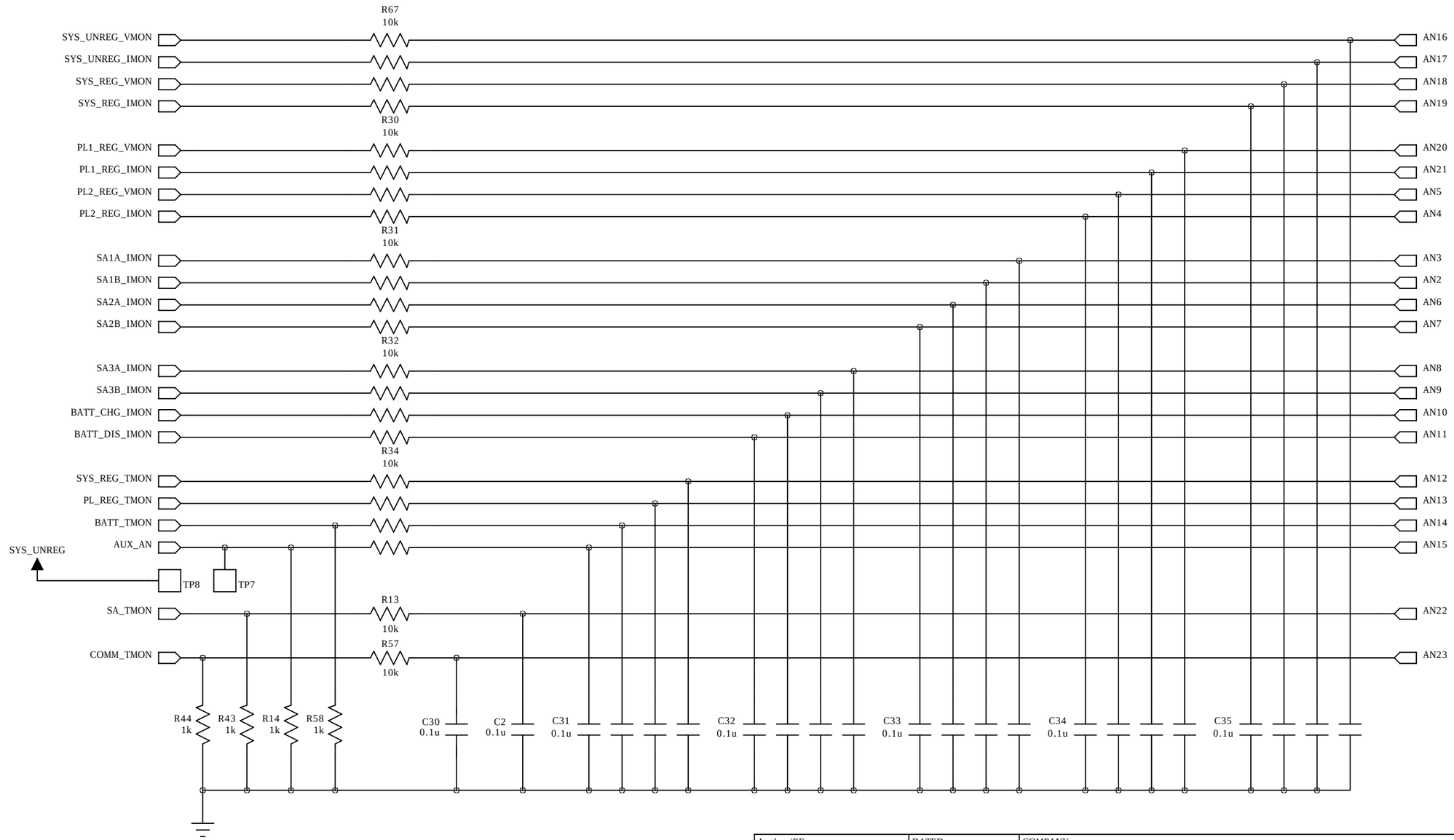


NOTES:
SA_TMON can be used as an IO pin for SA3B if needed (port RA7)
AUX_AN can be connected to a remote AD590 temperature sensor or other analog signal as needed

| | | | |
|---|---|---|---|
| Author/RE: Matt Voll | DATED: 05/19/2016 | COMPANY: Space Science & Engineering Lab | |
| Reviewed By: | DATED: | TITLE: Phoenix EPS | |
| Reviewed By: | DATED: | DOCUMENT NO: SSEL-E-5___ | REV: 3.0 |
| Approved: | DATED: | SHEET NAME: ANALOG_FILTERS | SIZE: B SHEET: -1 OF 13 |

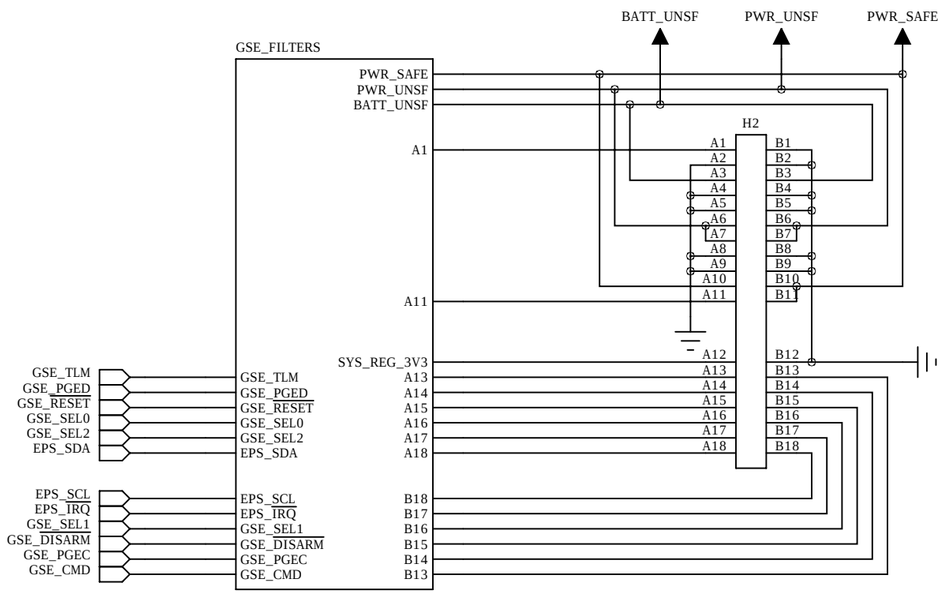


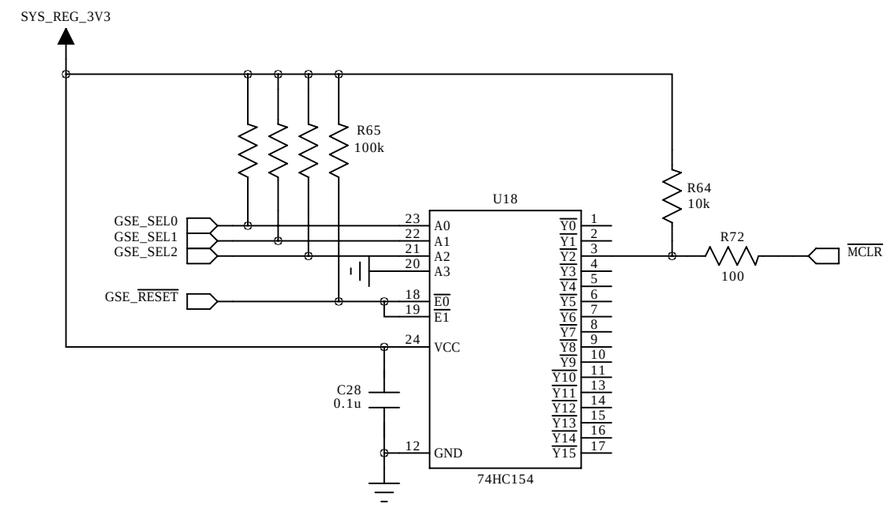


GSE_SEL[0:2] = 010 for EPS PIC24 programming

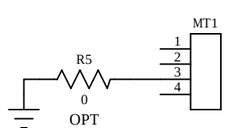


NOTES:
GSE_SEL/RESET pins are used to drive the EPS PIC24's master reset for programming
TCA9517 provides a buffered I2C bus for on-board circuitry requiring a digital interface
EPS_SDA/SCL pullup resistors are on SYSTEM_INTERFACE subsheet
Maximum capacitive load on EPS_SDA/SCL lines is 400pF
H2 pinout is designed with cable harnessing in mind to mitigate EMI/ESD in the test setup
Optional jumper can be installed to tie the local PCB ground to the board standoffs and structure

| | | | |
|---|---|---|---|
| Author/RE: Matt Voll | DATED: 05/19/2016 | COMPANY: Space Science & Engineering Lab | |
| Reviewed By: | DATED: | TITLE: Phoenix EPS | |
| Reviewed By: | DATED: | DOCUMENT NO: SSEL-E-5___ | REV: 3.0 |
| Approved: | DATED: | SHEET NAME: GSE_INTERFACE | SIZE: B SHEET: -1 OF 13 |

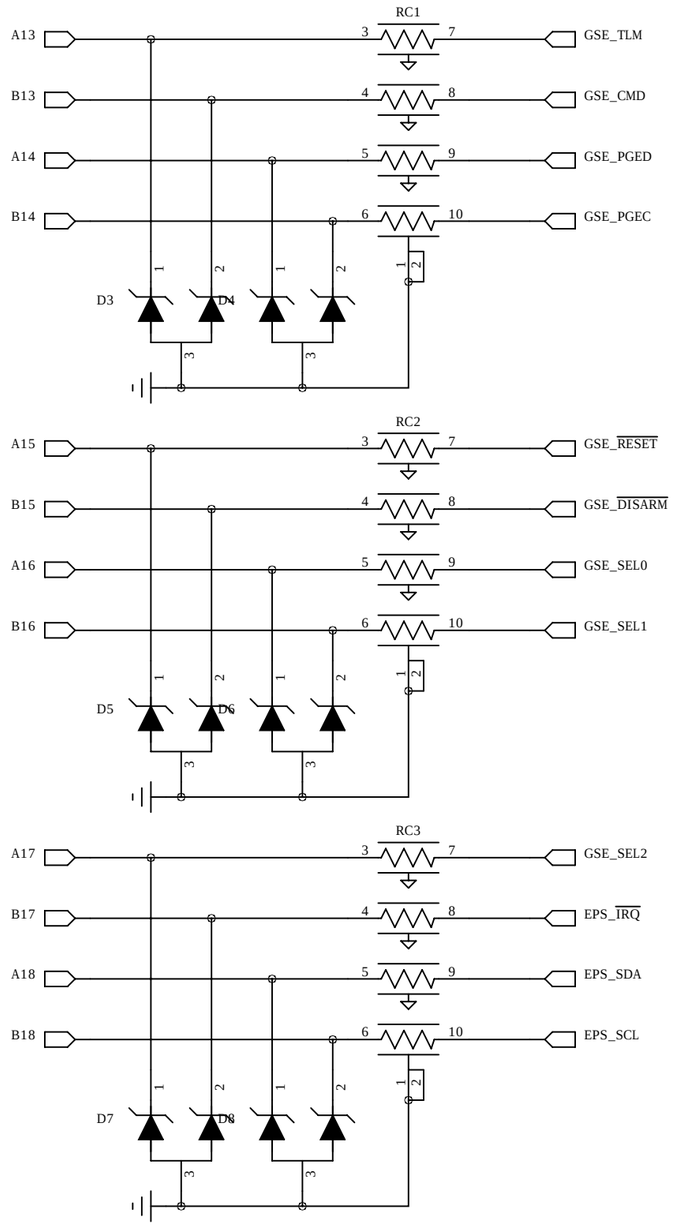


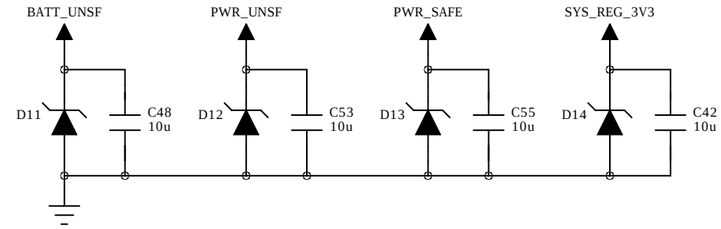


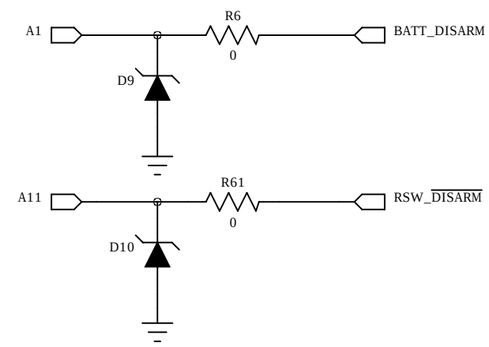


| | | | |
|---|---|---|---|
| Author/RE: Matt Voll <Sig> | DATED: 05/19/2016 | COMPANY: Space Science & Engineering Lab | |
| Reviewed By: <Sig> | DATED: | TITLE: Phoenix EPS | |
| Reviewed By: <Sig> | DATED: | DOCUMENT NO: SSEL-E-5___ | REV: 3.0 |
| Approved: <Sig> | DATED: | SHEET NAME: GSE_FILTERS | SIZE: B SHEET: -1 OF 13 |

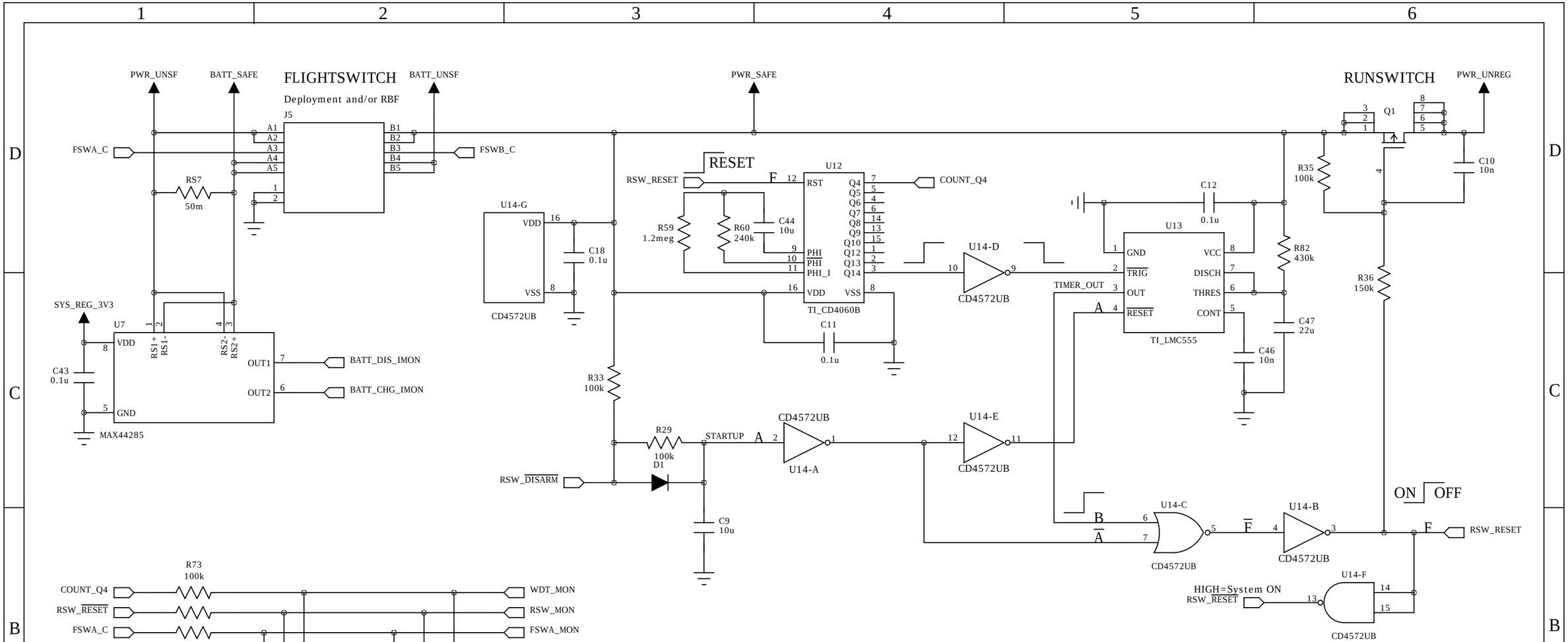


| STARTUP | TIMER_OUT | COUNT_RESET | TIMER_RESET | RSW_RESET |
|---|---|---|---|---|
| 0 | 0 | 1 | 0 | 1 |
| 0 | 1 | 1 | 0 | 1 |
| 1 | 0 | 0 | 1 | 0 |
| 1 | 1 | 1 | 1 | 1 |
| A | B | A' + B = F | A | F |

NOTES:

RSW_RESET is an active LOW enable for the RUNSWITCH

CD4060B counter uses an RC oscillator to create a ~12 hour delayed pulse

555 timer triggered by inverted counter output and drives a HIGH pulse to RUNSWITCH control logic

RSW_DISARM can be pulled LOW by EGSE jumper to inhibit the RUNSWITCH (RBF alternative)

FSWA/FSWB_C pins can be connected to intermediate FLIGHTSWITCH terminals if applicable

WDT/RSW/FSWA/FSWB_MON signals are divided down to low-voltage logic (5.5V max rated)

| | | | |
|---|---|---|---|
| Author/RE: Matt Voll | DATED: 05/19/2016 | COMPANY: Space Science & Engineering Lab | |
| Reviewed By: | DATED: | TITLE: Phoenix EPS | |
| Reviewed By: | DATED: | DOCUMENT NO: SSEL-E-5___ | REV: 3.0 |
| Approved: | DATED: | SHEET NAME: INHIBITS | SIZE: B SHEET: -1 OF 13 |

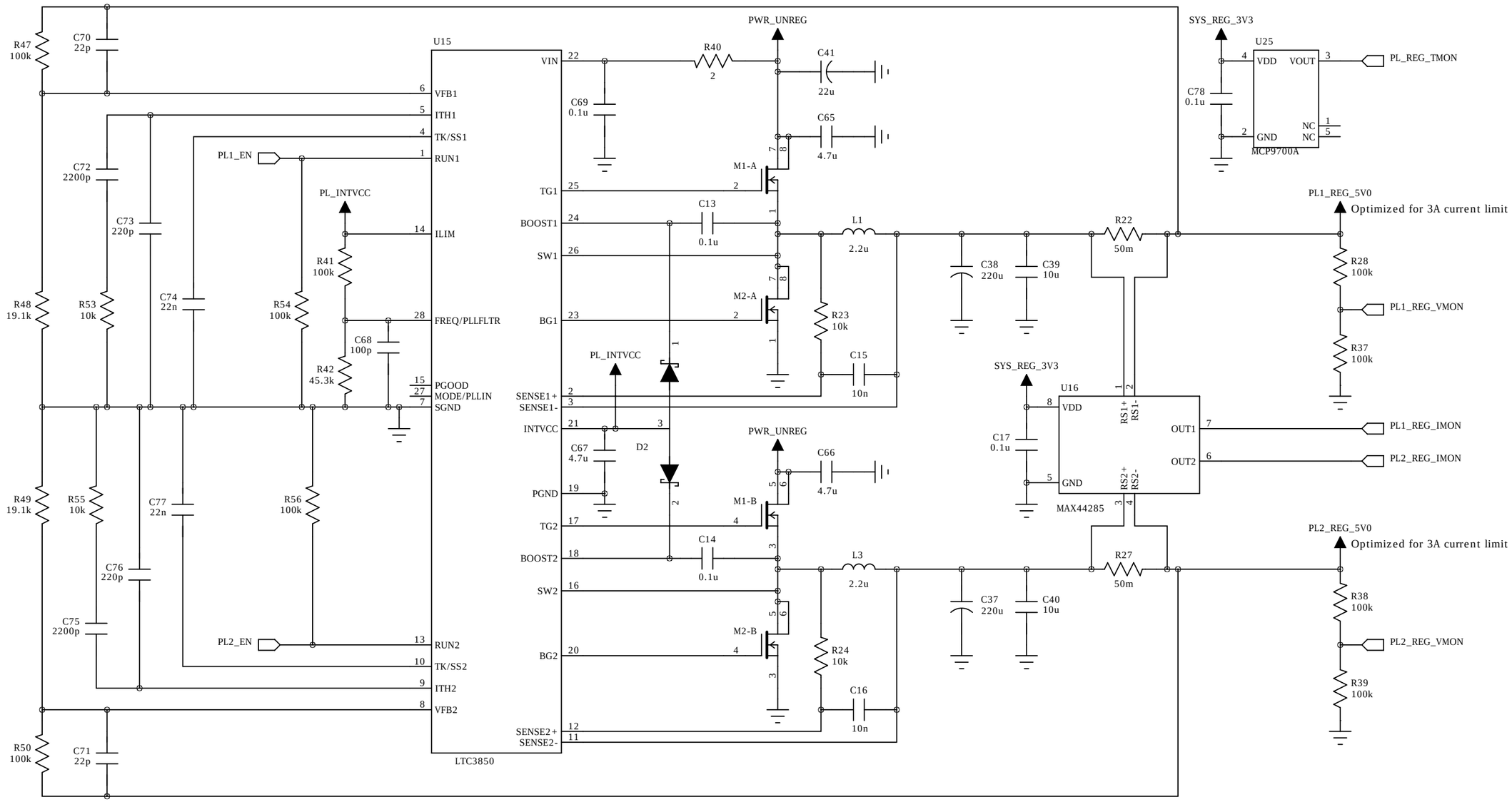


NOTES:
Bus regulation and monitoring for dedicated payload power supplies
PL1/PL2_REG_5V0 are enabled by IO pins on the EPS microcontroller

| | | |
|---|---|---|
| Author/RE: Matt Voll | DATED: 05/19/2016 | COMPANY: Space Science & Engineering Lab |
| Reviewed By: | DATED: | TITLE: Phoenix EPS |
| Reviewed By: | DATED: | DOCUMENT NO: SSEL-E-5___ / REV: 3.0 |
| Approved: | DATED: | SHEET NAME: PAYLOAD_BUS_REG / SIZE: B / SHEET: -1 OF 13 |

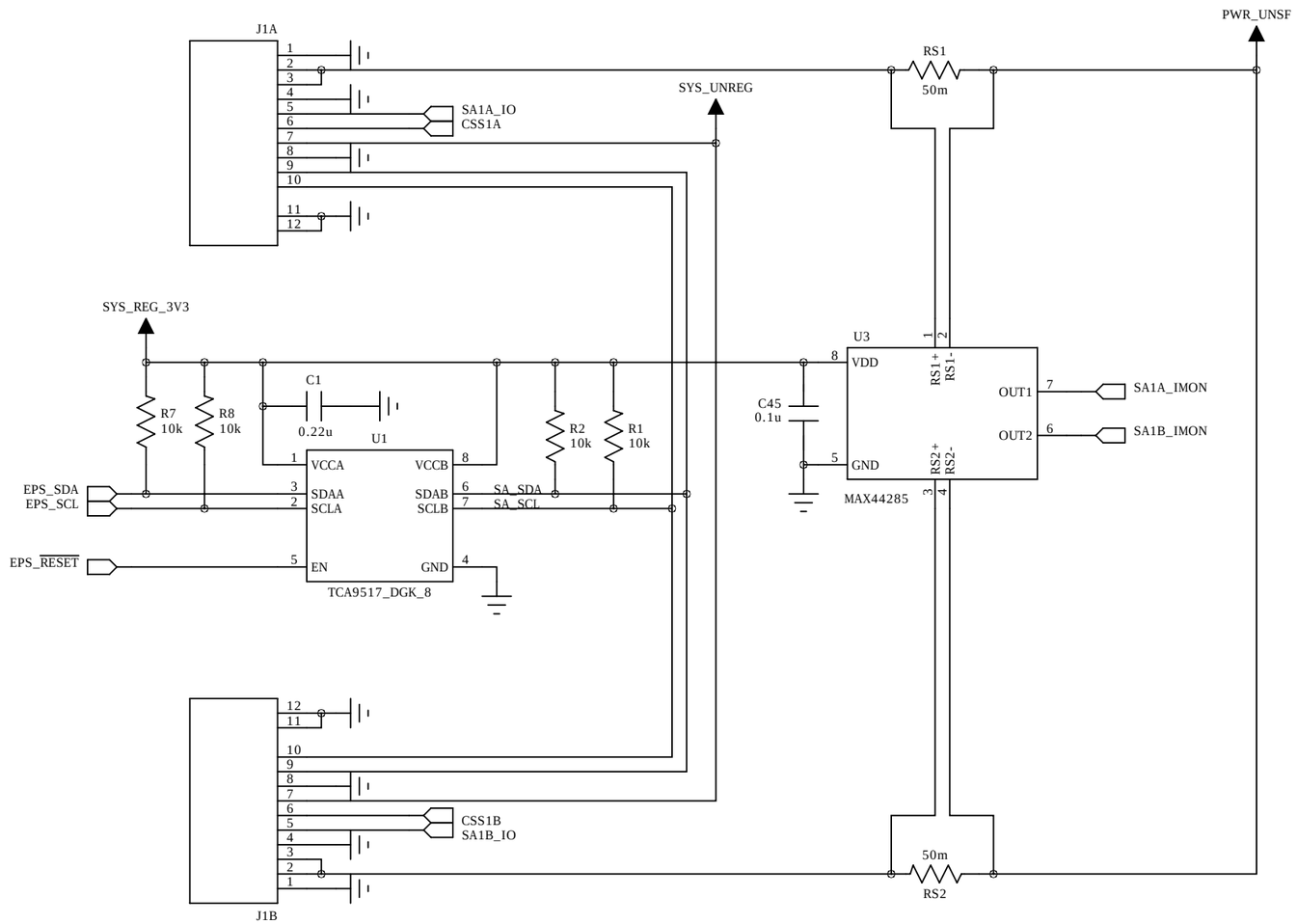


NOTES:
Current sensing and connectors for solar array pair 1
TCA9517 provides a buffered I2C bus for any external circuitry requiring a digital interface
Maximum capacitive load on SA_SDA/SCL lines is 400pF

| | | | |
|---|---|---|---|
| Author/RE: Matt Voll | DATED: 05/19/2016 | COMPANY: Space Science & Engineering Lab | |
| Reviewed By: | DATED: | TITLE: Phoenix EPS | |
| Reviewed By: | DATED: | DOCUMENT NO: SSEL-E-5___ | REV: 3.0 |
| Approved: | DATED: | SHEET NAME: SOLAR_ARRAY1 | SIZE: B SHEET: -1 OF 13 |

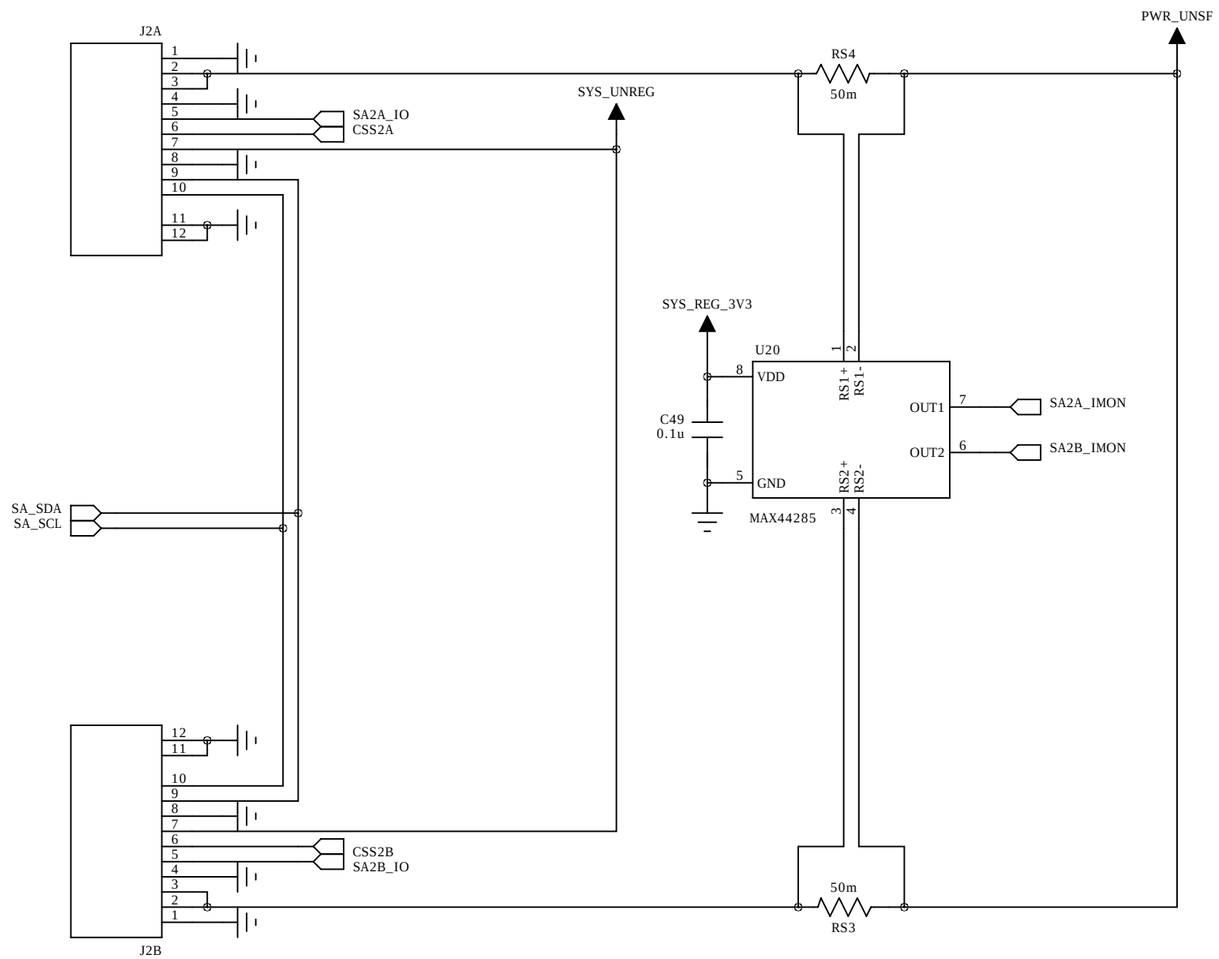


NOTES:
Current sensing and connectors for solar array pair 2

| | | | |
|---|---|---|---|
| Author/RE: Matt Voll | DATED: 05/19/2016 | COMPANY: Space Science & Engineering Lab | |
| Reviewed By: | DATED: | TITLE: Phoenix EPS | |
| Reviewed By: | DATED: | DOCUMENT NO: SSEL-E-5___ | REV: 3.0 |
| Approved: | DATED: | SHEET NAME: SOLAR_ARRAY2 | SIZE: B SHEET: -1 OF 13 |

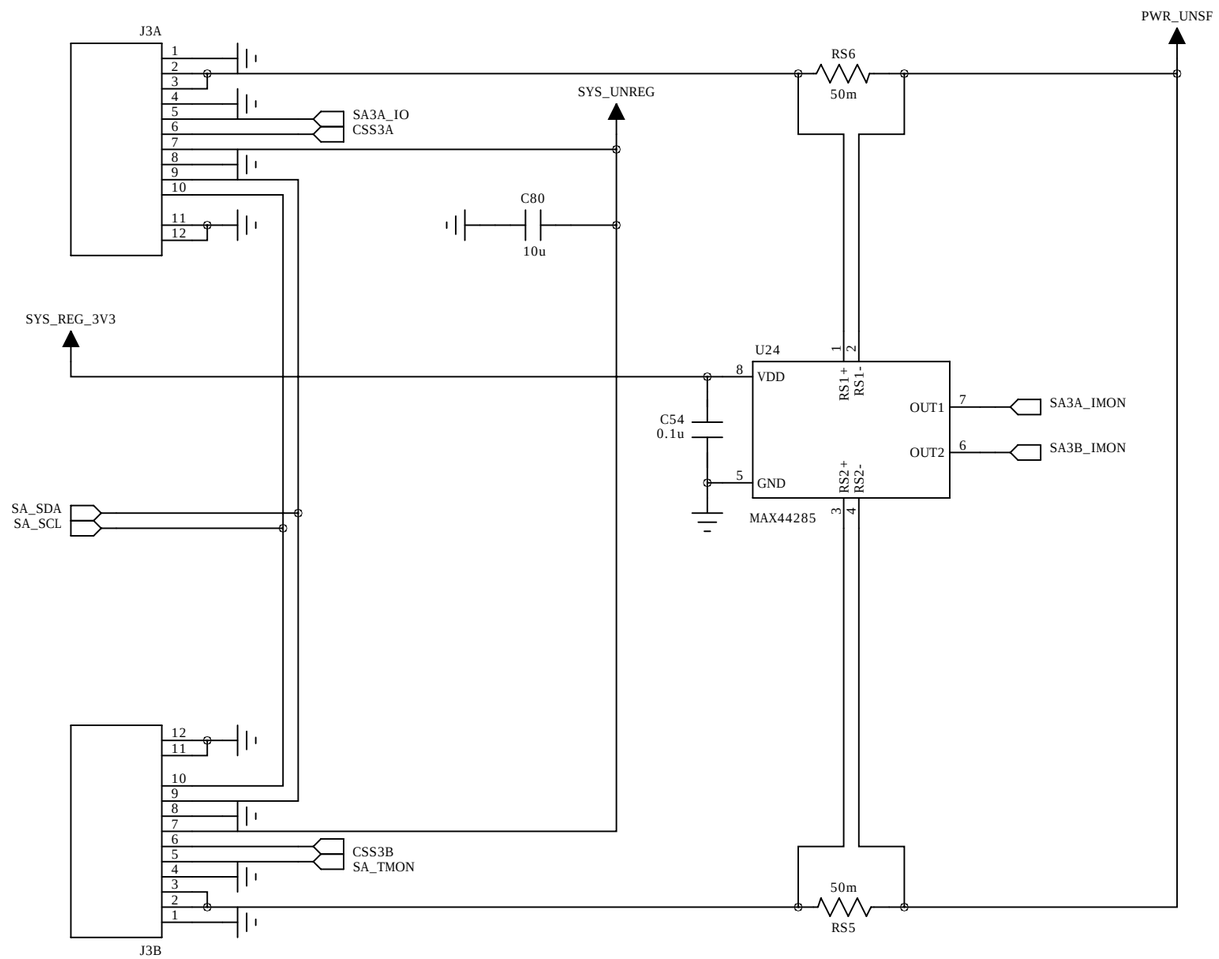


NOTES:
Current sensing and connectors for solar array pair 3

| | | | |
|---|---|---|---|
| Author/RE: Matt Voll | DATED: 05/19/2016 | COMPANY: Space Science & Engineering Lab | |
| Reviewed By: | DATED: | TITLE: Phoenix EPS | |
| Reviewed By: | DATED: | DOCUMENT NO: SSEL-E-5___ | REV: 3.0 |
| Approved: | DATED: | SHEET NAME: SOLAR_ARRAY3 | SIZE: B SHEET: -1 OF 13 |

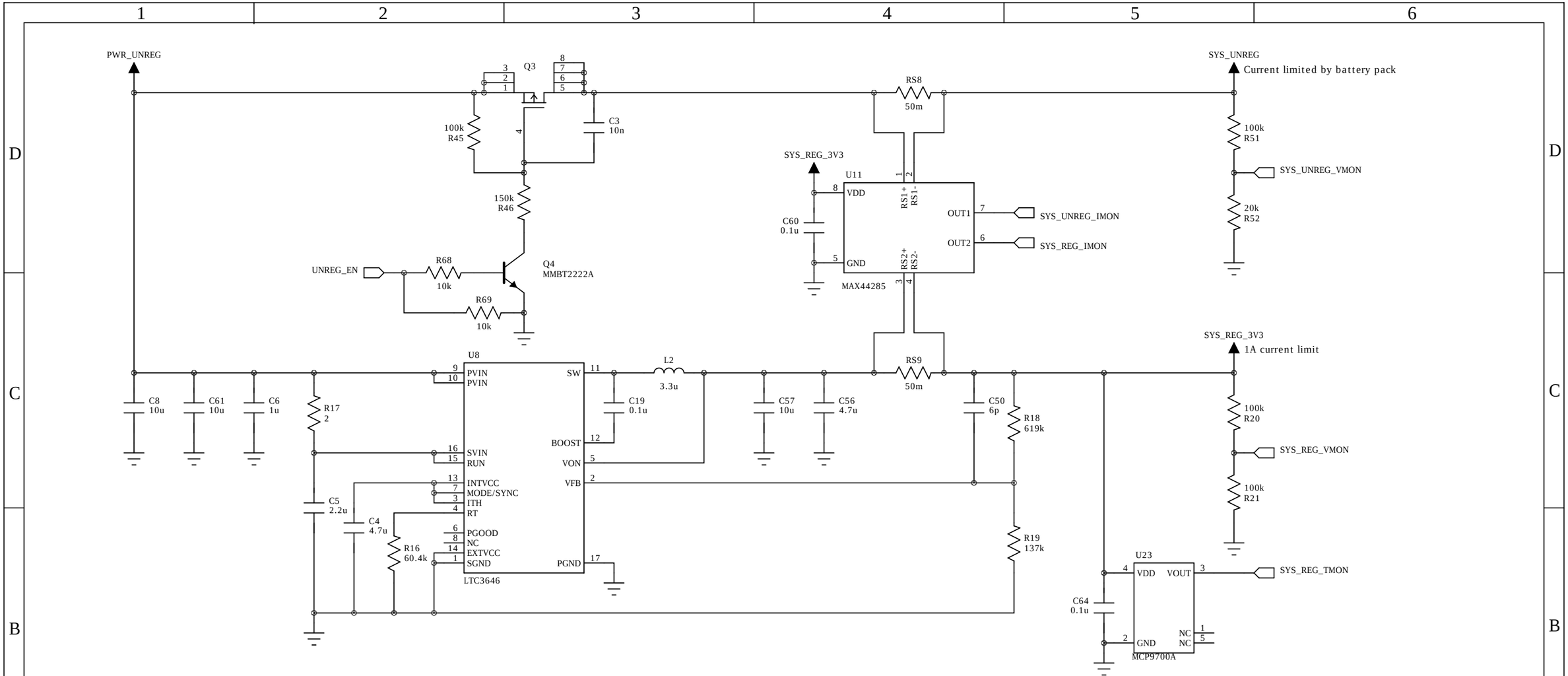


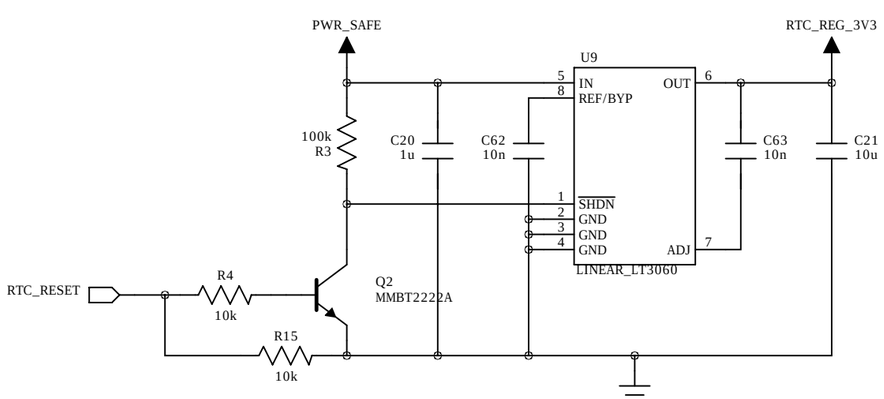


NOTES:

Bus regulation and monitoring for system 3.3V and unregulated power

SYS_UNREG and SYS_REG_3V3 are always powered on if RUNSWITCH is enabled

RTC LDO is powered by PWR_SAFE to ensure the RTC stays powered during RUNSWITCH reset

RTC_RESET can disable the RTC LDO when driven HIGH

| | | | |
|---|---|---|---|
| Author/RE: Matt Voll | DATED: 05/19/2016 | COMPANY: Space Science & Engineering Lab | |
| Reviewed By: | DATED: | TITLE: Phoenix EPS | |
| Reviewed By: | DATED: | DOCUMENT NO: SSEL-E-5___ | REV: 3.0 |
| Approved: | DATED: | SHEET NAME: SYSTEM_BUS_REG | SIZE: B SHEET: -1 OF 13 |

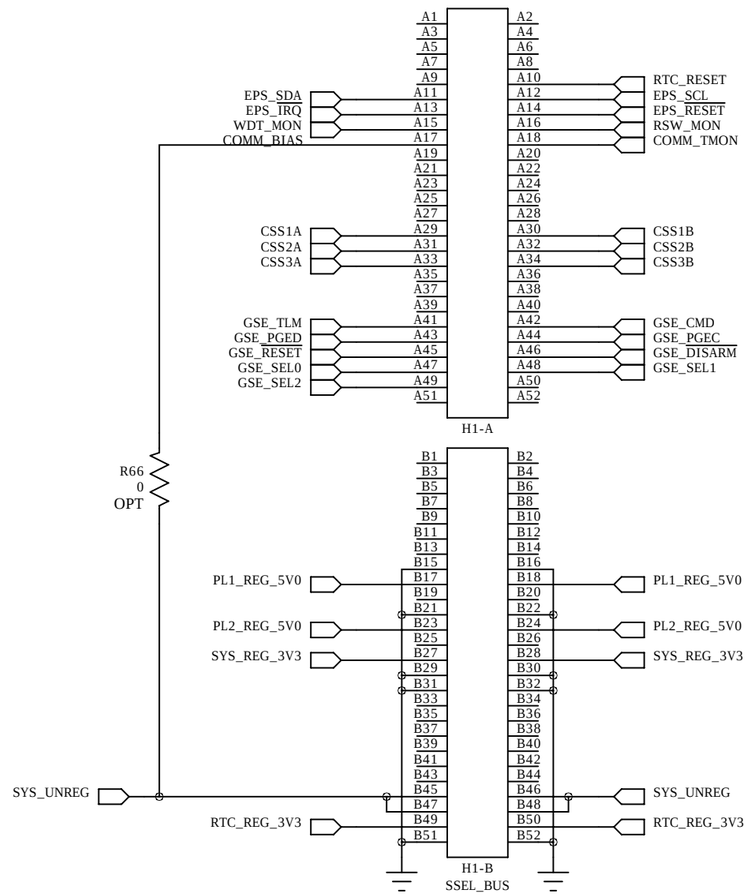


| | | | |
|---|---|---|---|
| Author/RE: Matt Voll | DATED: 05/19/2016 | COMPANY: Space Science & Engineering Lab | |
| Reviewed By: | DATED: | TITLE: Phoenix EPS | |
| Reviewed By: | DATED: | DOCUMENT NO: SSEL-E-5___ | REV: 3.0 |
| Approved: | DATED: | SHEET NAME: SYSTEM_INTERFACE | SIZE: B SHEET: -1 OF 13 |