Makeitalive: Landscape Picture Animation

Mathurin Petit, Arthur Fournier

CSC_52002 — Generative AI Project

1. Project Overview

The **Makeitalive** project explores the transformation of a static landscape photograph into a realistic animation. We preserve the original texture while injecting coherent, loopable movement.

We investigated two complementary approaches:

- **Motion-Flow U-Net**: a lightweight CNN that predicts a dense optical flow field (dx, dy) per pixel; pixels are warped over time to create motion.
- **SVD fine-tuning**: a Stable Video Diffusion model fine-tuned on landscape drone footage to generate full video frames directly.

2. The Motion-Flow Concept

The approach estimates an *Optical Flow* field from a single image:

- A U-Net predicts per-pixel displacement vectors (dx, dy).
- **Backward Mapping** warps the original image at each time-step t:

$$I_{\text{anim}}(x, y, t) = I_{\text{orig}}\big(x - \alpha_t\, dx,\ y - \alpha_t\, dy\big)$$

- α_t is changed to produce seamless loops.
- Boundary condition `mode='reflect'` avoids edge artifacts.

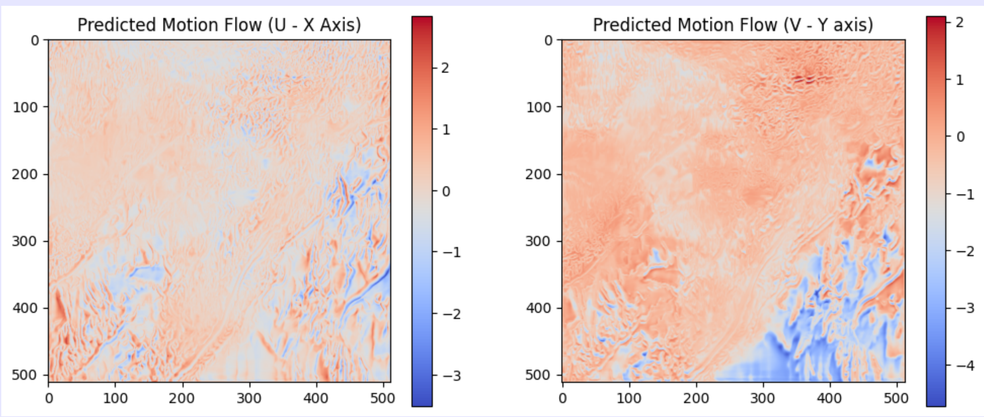

3. MotionFlowUNet Architecture

Design rationale. The network maps a single RGB image to a two-channel flow field (dx, dy). The U-Net architecture with skip connections is used to maintain spatial resolution. Channel widths: $32 \to 64 \to 128 \to 256 \to 512$.

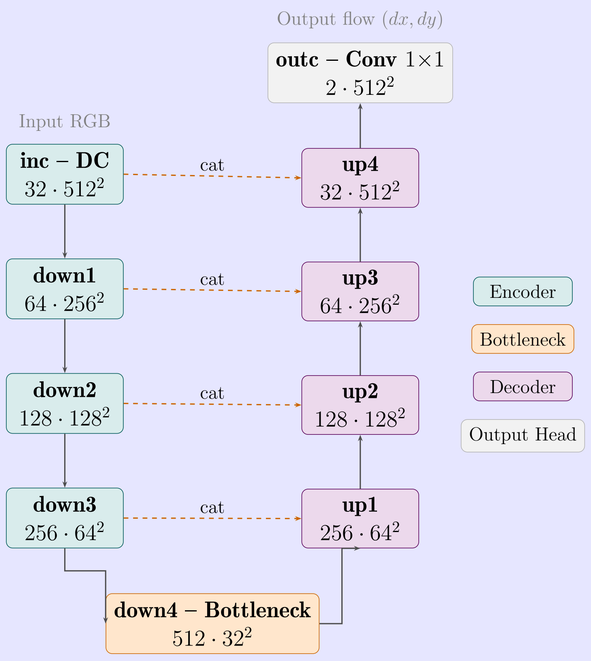

4. Rendering & Inference Strategies

Once the flow is predicted, two rendering strategies are used to animate the image:

A. Oscillatory Warping (Seamless Loop)

- Uses a **single flow prediction** from the original image.
- The displacement is modulated by an oscillating function (e.g., sine wave).
- **Advantage:** Perfectly seamless cycles; preserves 100% of original texture detail as it always warps from the source frame.

B. Auto-Regressive Inference (Recursive)

- The model's output becomes its next input in a recursive loop:

$$I_{n+1} = \text{Warp}(I_n, \text{Model}(I_n))$$

- **Advantage:** Generates **continuous, non-periodic motion** that can evolve over time.
- **Trade-off:** Repeated resampling may lead to accumulated "blurring" after many steps.

5. The SVD Architecture

Design rationale. The SVD pipeline conditions a Temporal U-Net on a single image via a dual encoder (VAE + CLIP). Only the temporal attention layers are fine-tuned; spatial attention weights remain frozen.

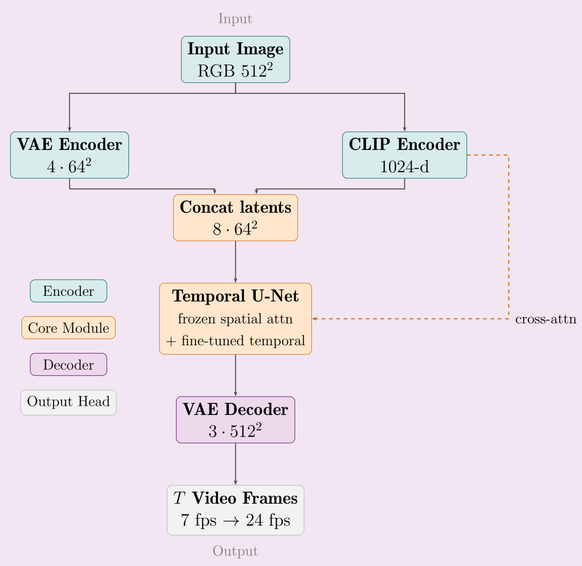

	Motion Flow	SVD
Parameters	<100MB	1.5B
Output	Flow (dx, dy)	Video frames
Training	MSE on flow	EDM diffusion loss
Inference	Real-time	∼25s / clip

6. Comparison of Approaches

Criterion	Motion Flow	SVD fine-tuned
Parameters	<100 MB	1.5 B
Output	Flow (dx, dy)	Video frames
Training loss	MSE on flow	EDM diffusion loss
Inference speed	Real-time	∼25 s / clip
Image fidelity	Maximum (warp only)	High
Hardware required	CPU / light GPU	High-end GPU

7. Result Evaluation

Qualitative analysis (Input → Generated → Ground Truth):

- **Motion Flow strengths:** excellent on water surfaces and smooth reflections where flow is coherent.
- **Motion Flow limitations:** flow ambiguity on dense clouds; some artifacts on high-frequency textures.
- **SVD_Xtend:** produces coherent drone-style camera motion; $\Delta\text{loss} \approx -0.30$ vs. naive LoRA.
- **SVD limitations:** interpolation artifacts on foliage; motion amplitude constrained by `motion_bucket_id`.

Ablation — impact of dataset quality:

Setup	Final Loss	Motion quality
LoRA, static clips	0.46	None
LoRA, motion-filtered	0.51	Minimal
SVD_Xtend, motion-filtered	0.16	Cinematic