Makeitalive: Landscape Picture Animation

Mathurin Petit, Arthur Fournier

CSC_52002 — Generative AI Project

1. Project Overview

The **Makeitalive** project explores the transformation of a static landscape photograph into a realistic animation. We preserve the original texture while injecting coherent, loopable movement.

We investigated two complementary approaches:

- **Motion-Flow U-Net**: a lightweight CNN that predicts a dense optical flow field (dx, dy) per pixel; pixels are warped over time to create motion.
- **SVD fine-tuning**: a Stable Video Diffusion model fine-tuned on landscape drone footage to generate full video frames directly.

2. The Motion-Flow Concept

The approach estimates an *Optical Flow* field from a single image:

- A U-Net predicts per-pixel displacement vectors (dx, dy).
- **Backward Mapping** warps the original image at each time-step t:

$$I_{\text{anim}}(x, y, t) = I_{\text{orig}}\big(x - \alpha_t\, dx,\ y - \alpha_t\, dy\big)$$

- α_t oscillates sinusoidally to produce seamless loops.
- Boundary condition `mode='reflect'` avoids edge artifacts.

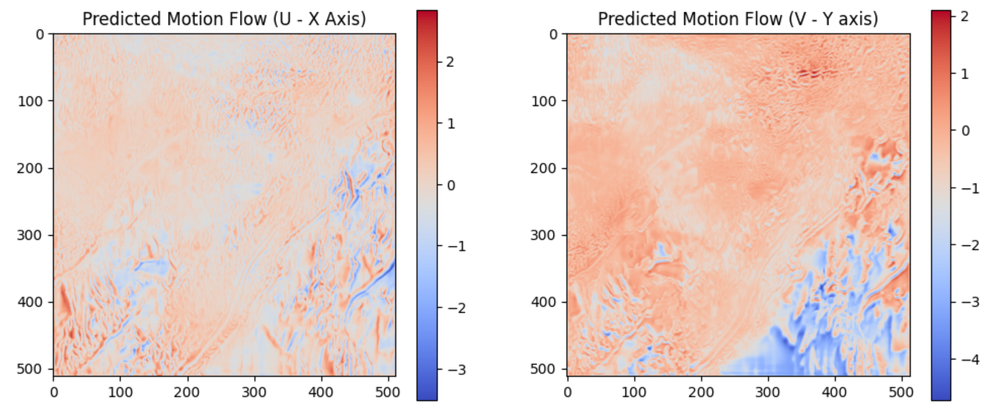

3. MotionFlowUNet Architecture

Design rationale. The network maps a single RGB image ($3 \times 512 \times 512$) to a two-channel flow field ($2 \times 512 \times 512$). A U-Net is ideal: skip connections preserve fine spatial detail. The channel widths are halved ($32 \to 64 \to 128 \to 256 \to 512$) to optimize VRAM.

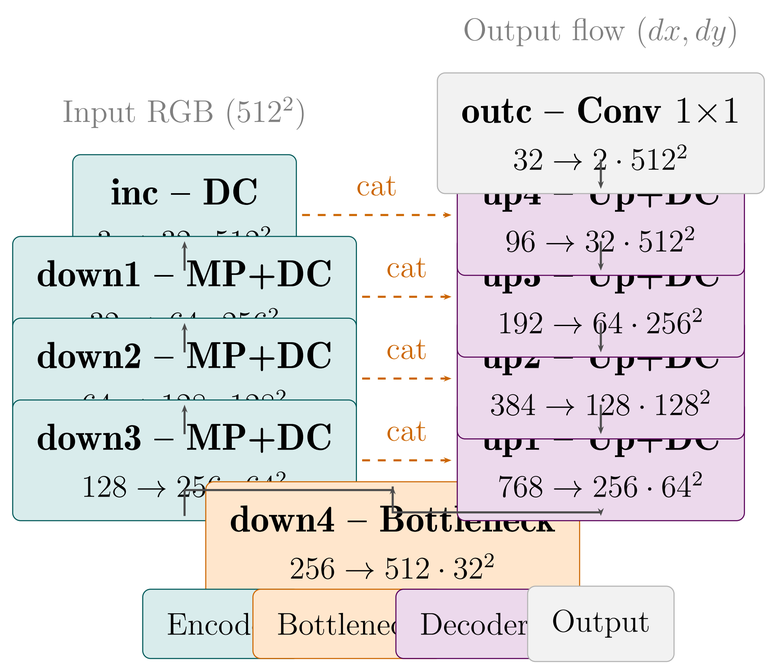

DoubleConv block. $\mathrm{DC}(x) = \mathrm{ReLU}(\mathrm{BN}(\mathrm{Conv}_{3\times3}(\dots)))$. Skip connections preserve high-frequency spatial information via `torch.cat`.

Hyperparam.	Value	Epoch	Val Loss
Optimizer	Adam 10^{-4}	1	0.480
Loss	MSE Flow	50	0.052
Epochs	100	100	**0.041**

4. Data Extraction & Filtering Pipeline

Source: 4K YouTube drone landscape videos.

Pair generation — for each video, consecutive frame pairs (I_A, I_B) are extracted:

- Sampling every **5 seconds** to ensure scene diversity.
- **3-frame gap** between I_A and I_B: large enough for visible motion, small enough to avoid large displacements.

Cut detection — two complementary metrics reject scene changes:

- **Bhattacharyya distance** on colour histograms > 0.35
- **Thumbnail MAE** (structural difference) > 0.25

This ensures the model learns genuine pixel movement, not montage jumps.

5. Stable Video Diffusion (SVD) Approach

Pipeline overview:

- YouTube drone videos $\to$ frame extraction with `frame_gap=12` ($\approx$7 s of real motion per clip)
- Motion filtering: $3.0 < \text{score} < 40.0$ (rejects static scenes and hard cuts)
- Fine-tuning via **SVD_Xtend**: full UNet training, $lr = 10^{-5}$, 5 000 steps on 2374 clips

Key design choices:

- `noise_aug_strength=0.02`: adds noise to conditioning frame, closes the train/inference gap.
- CFG dropout: enables guidance-scale control at inference.
- Post-processing: raw 7 fps output slowed to 2 fps then interpolated to 24 fps via `ffmpeg minterpolate`.

Loss convergence (SVD_Xtend):

Steps	Step Loss
500	$\sim$0.60
1000	$\sim$0.45
3000	$\sim$0.16
5000	$\sim$0.20

6. Comparison of Approaches

Criterion	Motion Flow	SVD fine-tuned
Parameters	<100 MB	1.5 B
Output	Flow (dx, dy)	Video frames
Training loss	MSE on flow	EDM diffusion loss
Inference speed	Real-time	$\sim$25 s / clip
Image fidelity	Maximum (warp only)	High
Hardware required	CPU / light GPU	High-end GPU

7. Result Evaluation

Qualitative analysis (Input $\to$ Generated $\to$ Ground Truth):

- **Motion Flow strengths:** excellent on water surfaces and smooth reflections where flow is coherent.
- **Motion Flow limitations:** flow ambiguity on dense clouds; some artifacts on high-frequency textures.
- **SVD_Xtend:** produces coherent drone-style camera motion; $\Delta\text{loss} \approx -0.30$ vs. naive LoRA.
- **SVD limitations:** interpolation artifacts on foliage; motion amplitude constrained by `motion_bucket_id`.

Ablation — impact of dataset quality:

Setup	Final Loss	Motion quality
LoRA, static clips	0.46	None
LoRA, motion-filtered	0.51	Minimal
SVD_Xtend, motion-filtered	0.16	Cinematic

8. Conclusion & Perspectives

The hybridization of both approaches delivers the best of both worlds: **structural speed** (Motion Flow, real-time, lightweight) combined with **generative richness** (SVD, photo-