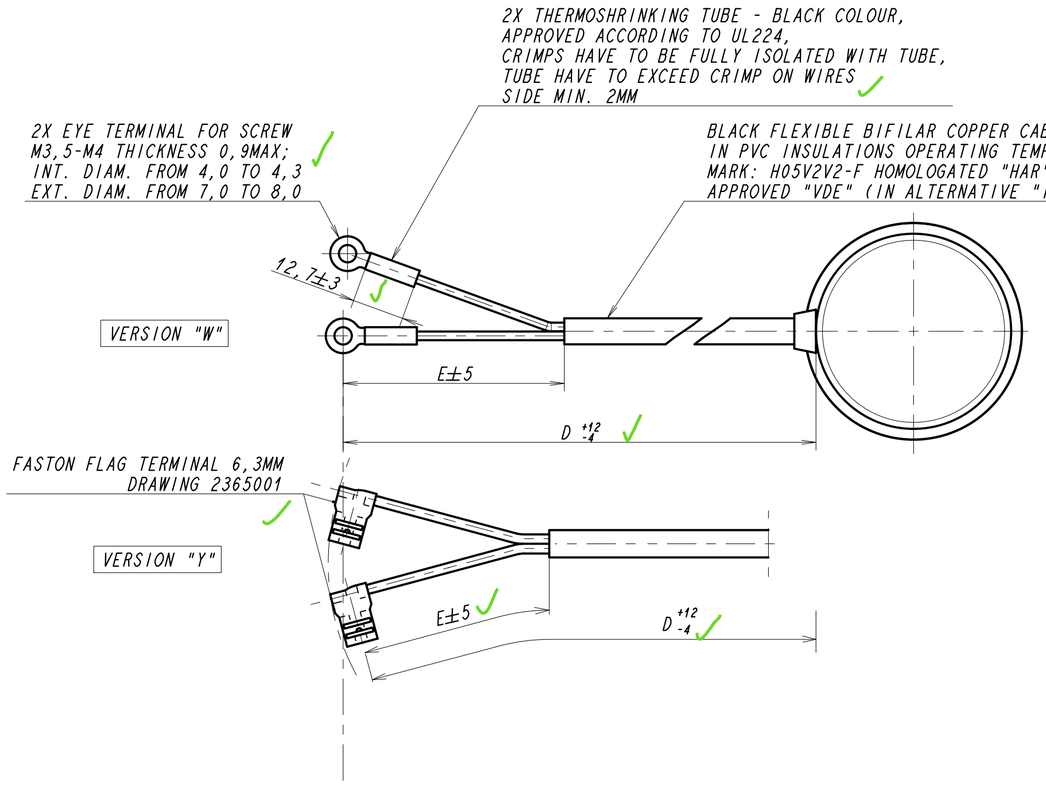

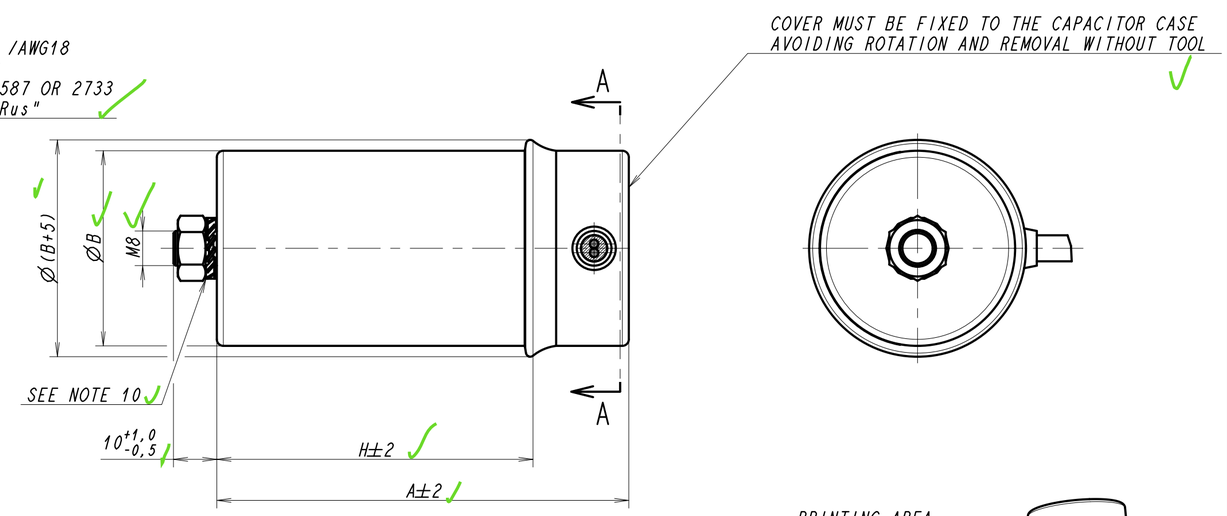

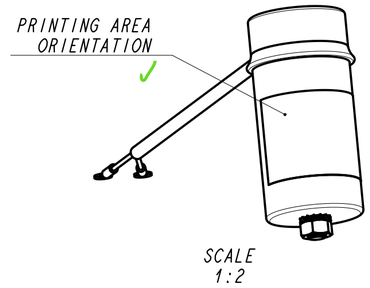

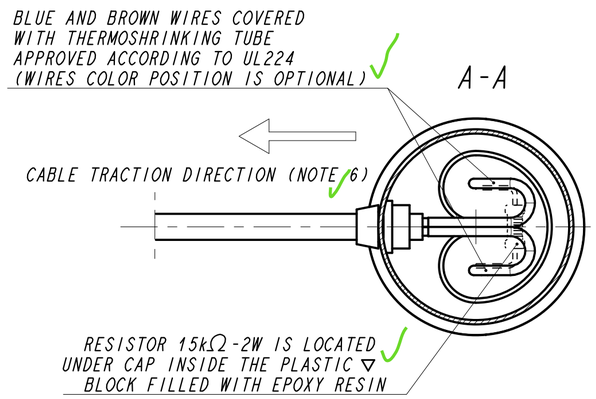

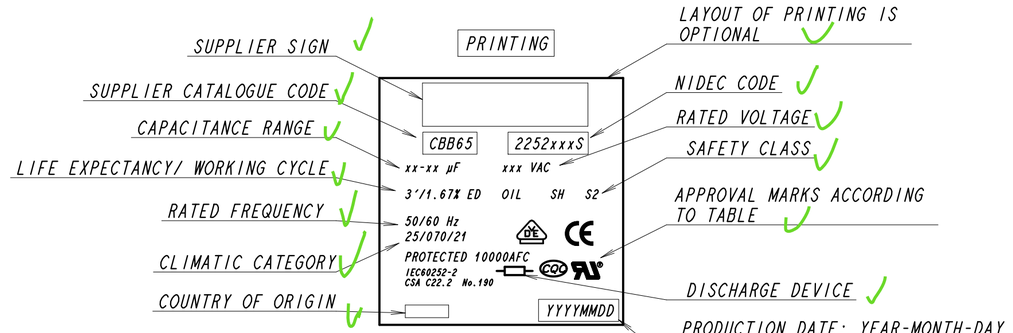

NOTES:

1-FOR INCOMING INSPECTION USE INTERNAL STANDARD TSS 002573.▽
2-ORIENTATION POSITION OF CABLE TERMINALS ON ASSEMBLY MUST BE AS IS SHOWN.
3-MATERIAL: ALUMINUM CASE WITH M8 SCREW, ALUMINUM COVER, PP METALLIZED FILM DIELECTRIC, FILLED WITH OIL.▽
4-CAPACITOR HAVE AN OVERPRESSURE SAFETY DEVICE THAT SWITCH OFF THE CONNECTION IN CASE OF ACCIDENTAL FAILURE.
5-MUST BE ACCORDING TO STANDARDS UL 810, IEC 60252-2, gb/t 3667.2 AND IEC/EN 60335-1: §25.23+25.24, 22.11+25.15, 30.2.3.1+30.2.3.2.▽
6-ASSEMBLY GROUP MUST GUARANTEE CABLE TENSION UNDER TIGHT 100N ACCORDING PARAGRAPH 25.15 OF IEC 60335-1.▽
7-REQUIREMENTS ABOUT HAZARDOUS SUBSTANCES MUST BE IN ACCORDANCE WITH THE TSS 002420.⊕
8-CRIMPING ACCORDING TO SOP 009340.
9-TREATMENT OF METALLIC PARTS MUST BE ACCORDING TO STANDARD TSS 000004.
10-CAPACITOR MUST BE SUPPLIED WITH NUT AND SERRATED TOOTH LOCK WASHER INTO HIS WRAPPING. FOR SLOVAKIA SITE DO NOT SUPPLY NUT AND WASHER.
11-DIMENSIONS AND SPECIFICATIONS SIGNED WITH ▽▼⊕, SEE TSS 002470.
12-CAPACITOR MUST BE IN ACCORDANCE WITH LAST VALID EDITION/REVISION OF MENTIONED STANDARDS IN NOTES 5 AND 6.
13-COMPONENTS SHALL COMPLY WITH CE AND UKCA REQUIREMENTS BY A COMPONENT MANUFACTURER SELF DECLARATION.
14-PROTECTION DEGREE MIN. IP55.

ECM	REVISION	LO	BY	DATE
CR24946 1	UPDATED NOTE 1 UPDATED NOTE ABOUT THERMOSHRINKING TUBE UPDATE NOTE ABOUT RESISTOR UPDATED VIEW A-A	NTS F1 C5	TF	13.FEB.2025
CR26339 2	UPDATED COLOR POSITION OF BLUE AND BROWN WIRES CHANGED TOLERANCE FROM 14±0,5 TO $14^{+1}_{-0,5}$ UPDATED LAYOUT OF PRINTING	C7 D5 C4	OP	3.APR.2025
CR26205 3	MOVED TABLE FROM SHEET 2 TO SHEET 1 INCL. CODE IN TABLE: F3556T4T CHANGED FROM ABBREVIATED CODE TO WIRE CODE IN LINE PRINTING INDICATION REMOVED NOTE 5 REORDERED NOTES UPDATED NOTE 12 ADDED THERMOSHRINKING TUBE FOR BLUE AND BROWN WIRES	TAB TAB C4 --- --- --- C8	BHL	2025.SEP.18
CR26205 4	ADDED CODES: 2252265, 2252466, 2252565, 2252665, 2252765, 2252865, 2252965, 2253065, 2253165, 2253265, 2253365, 2253465, 2253565, 2253665, 2253765, 2253865, 2253965, 2254065. TABLE MOVED TO SHEET 2.	TAB	OP	2025.NOV.24

CR31916

MATERIAL :	SEE NOTE
CODE :	
DRAWN :	TOMAS FARKASOVSKY
APP.:	MICHAL MINDAS
ECM :	CR24946
DATE :	26.JUN.2024

embraco Nidec

TITLE, DOCUMENT TYPE

SUREPHON

STARTING CAPACITOR

THIS MATERIAL IS CONFIDENTIAL AND PROPRIETARY TO EMBRACO, AND MAY NOT BE REPRODUCED, DISCLOSED, DISTRIBUTED OR USED WITHOUT PERMISSION

GEN. TOL. :	±1
ANG. TOL. :	±1
SCALE :	1:1 (1:2)
UNIT: mm	A2
REPLACE:	
No.	2252261TAB_SRP
SHEET NUMBER:	1 OF 2

▽ FOR ALL DATA IN THE TABLE

STARTING CAPACITOR 2252261TAB_SRP ROHS FREE

CODE NUMBER	VER-SION	SAFETY CLASS	ELE.CHARACTERISTIC			DIMENSIONS			CABLE LENGTH		APPROVAL MARKS				GENERAL (FOR EMBRACO INT. USE ONLY)
			uF	V	Hz	H	A	ØB	D	E	CE	VDE	UL OR UR	CQC	
2252261S	W	S2	53-64	330	50/60	65	85	40	220	70	*	*	*	*	NO
2252268S	W	S2	43-53	330	50/60	65	85	40	220	70	*	*	*	*	NO
2252269S	W	S2	88-108	330	50/60	75	95	45	220	70	*	*	*	*	NO
2252270S	W	S2	72-88	330	50/60	75	95	45	220	70	*	*	*	*	NO
2252271S	W	S2	108-130	330	50/60	80	100	50	220	70	*	*	*		NO
2252274S	W	S2	130-156	330	50/60	80	100	50	220	70	*	*	*	*	NO
2252291S	W	S2	64-77	330	50/60	65	85	45	220	70	*	*	*	*	NO
2252292S	W	S2	53-64	330	50/60	65	85	40	350	70	*	*	*	*	NO
2252294S	W	S2	72-88	330	50/60	75	95	45	350	70	*	*		*	NO
2252345S	Y	S2	72-88	330	50/60	75	95	45	350	70	*	*	*	*	NO
2252346S	Y	S2	53-64	330	50/60	65	85	40	350	70	*	*	*	*	NO
2252347S	Y	S2	43-53	330	50/60	65	85	40	350	70	*	*	*	*	NO
2252348S	Y	S2	88-108	330	50/60	75	95	45	350	70	*	*		*	NO
2252352S	Y	S2	64-77	330	50/60	65	85	45	350	70	*	*	*	*	NO
2252379S	Y	S2	108-130	330	50/60	85	105	45	350	70	*	*		*	NO
2252395S	Y	S2	64-77	330	50/60	65	85	45	220	70	*	*	*	*	NO
2252401S	Y	S2	108-130	330	50/60	80	100	50	220	70	*	*	*	*	NO
13556741	Y	S2	53-64	330	50/60	65	85	40	350	70	*	*	*	*	NO

REVISION			
ECM	LO	BY	DATE

MATERIAL :

CODE :

DRAWN : ONDREJ PETRUSKA

APP.: MICHAL MINDAS

ECM : CR31916 DATE : 24.NOV.2025

embraco Nidec

TITLE, DOCUMENT TYPE

STARTING CAPACITOR

THIS MATERIAL IS CONFIDENTIAL AND PROPRIETARY TO EMBRACO, AND MAY NOT BE REPRODUCED, DISCLOSED, DISTRIBUTED OR USED WITHOUT PERMISSION

GEN. TOL. :

ANG. TOL. :

SCALE : 1:1

UNIT: mm A3

REPLACE:

No. 2252261TAB_SRP

SHEET NUMBER: 2 OF 2