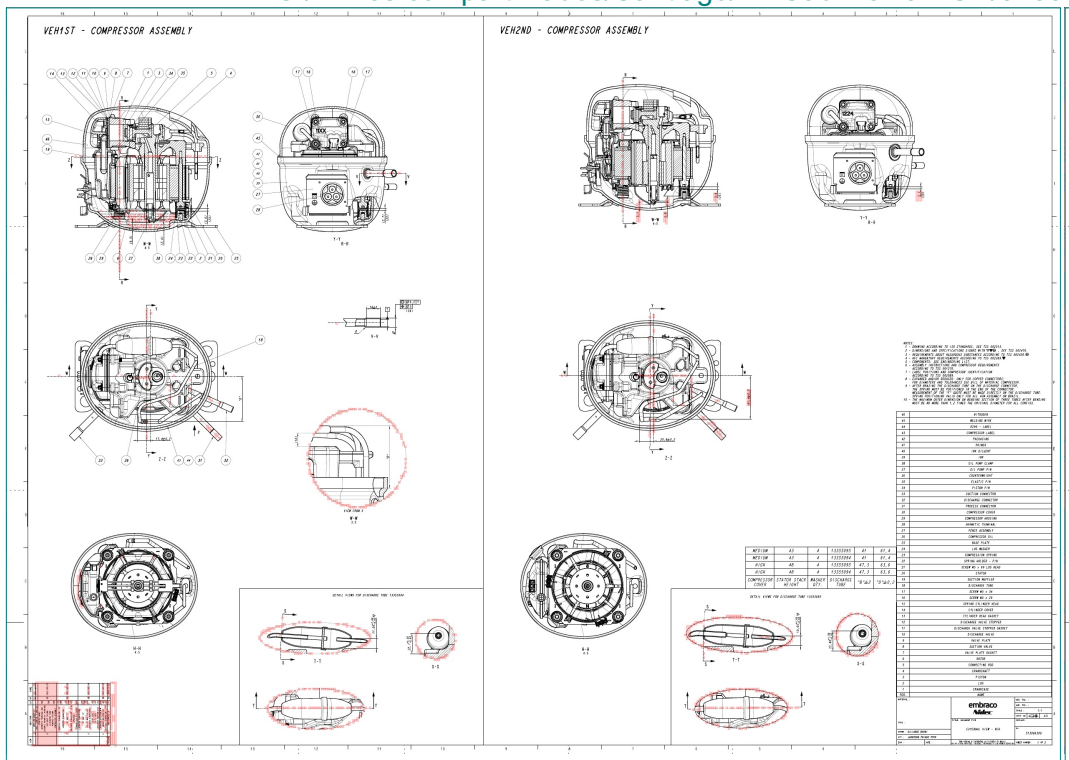
VEH1ST - COMPRESSOR ASSEMBLY
VEH2ND - COMPRESSOR ASSEMBLY
embraco
Aspera

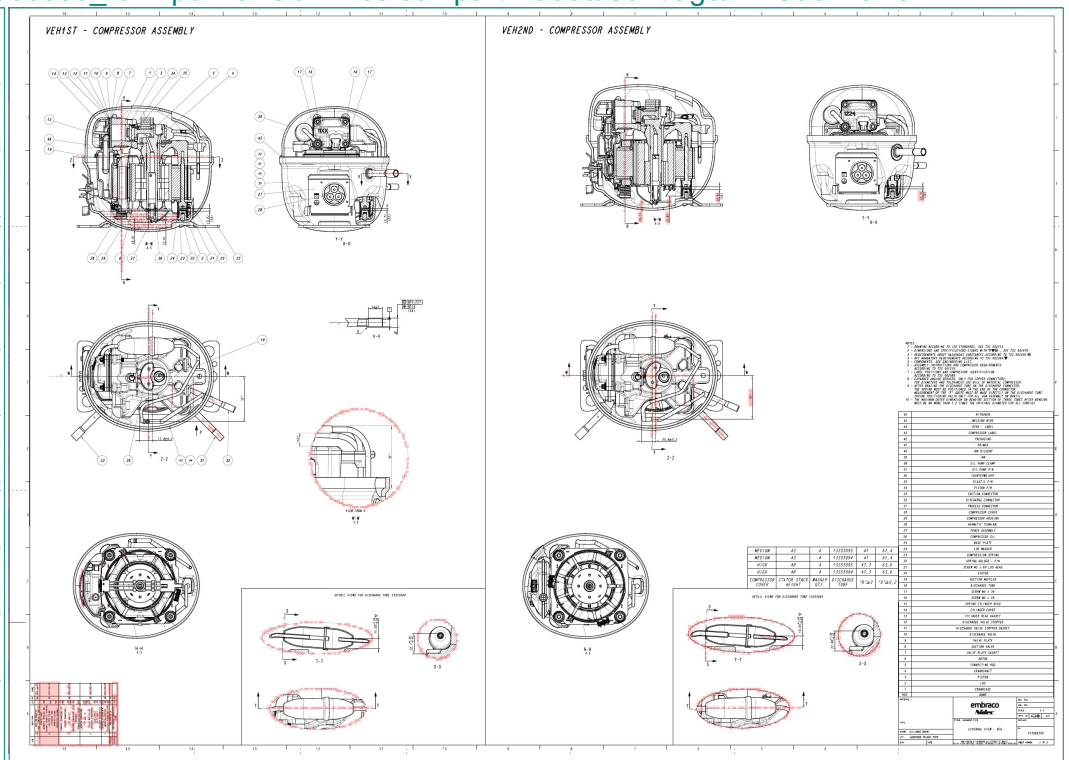
VEH1ST - COMPRESSOR ASSEMBLY
VEH2ND - COMPRESSOR ASSEMBLY
embraco
Aspera

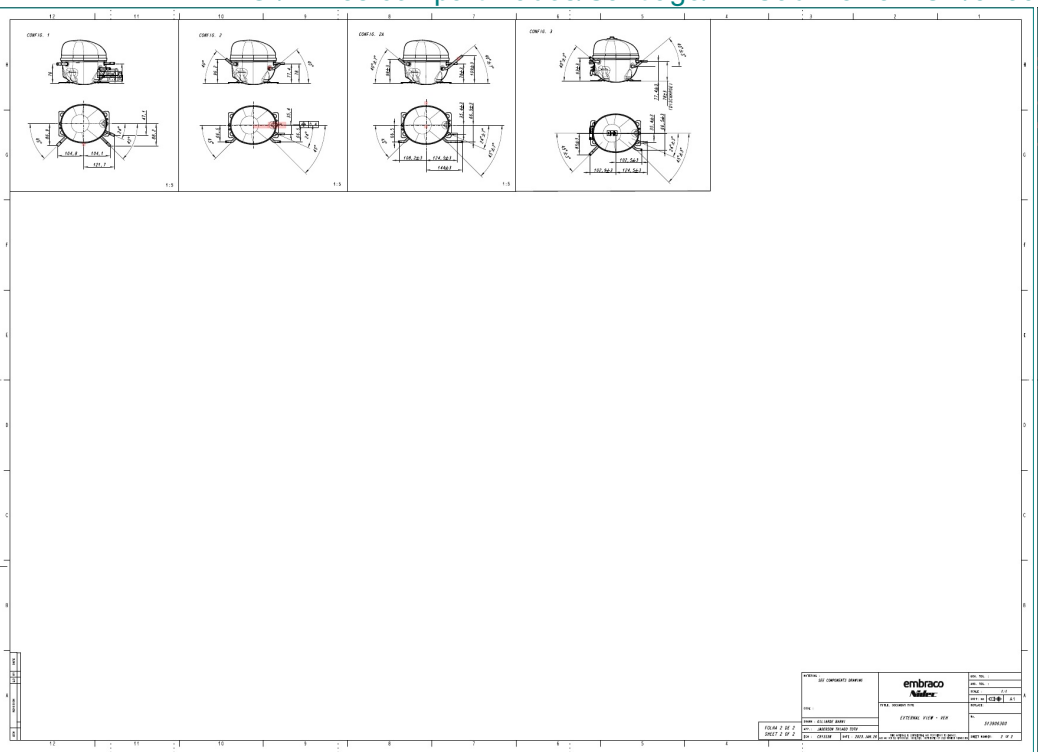
CONFIG. 1
CONFIG. 2
CONFIG. 2A
CONFIG. 3
1:5
embraco
EXTERNAL VIEW - VER
513906300
FOLHA 2 DE 2
SHEET 2 OF 2

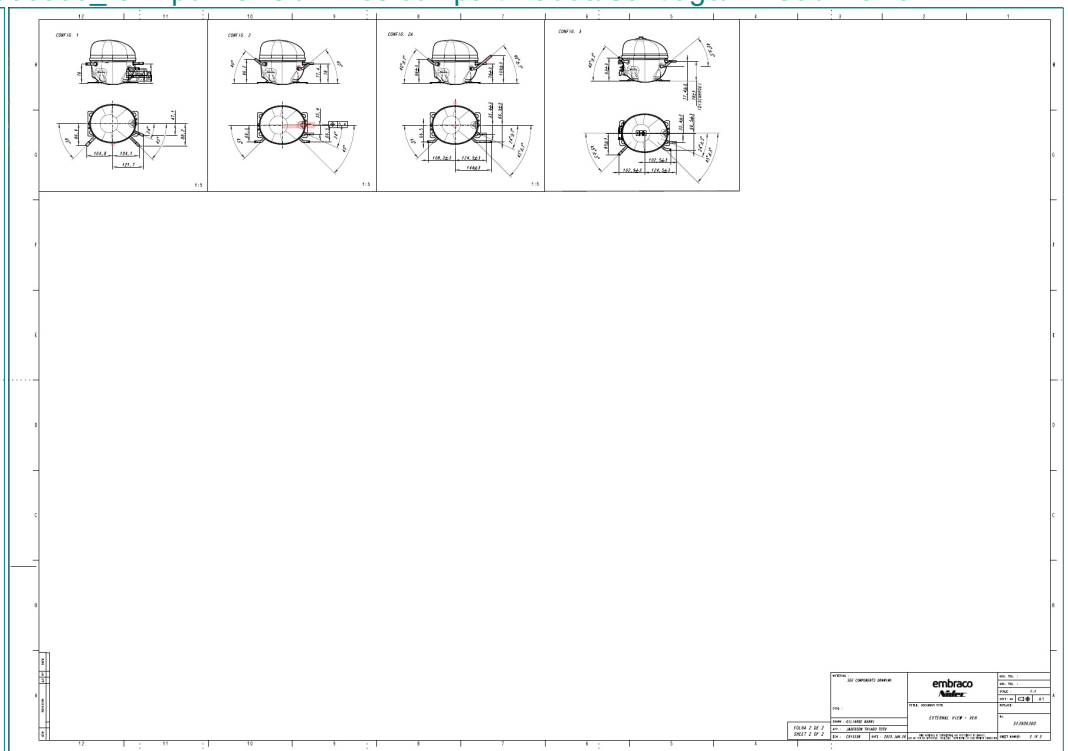
CONFIG. 1
CONFIG. 2
CONFIG. 2A
CONFIG. 3
1:5
embraco
EXTERNAL VIEW - VER
513906300
FOLHA 2 DE 2
SHEET 2 OF 2