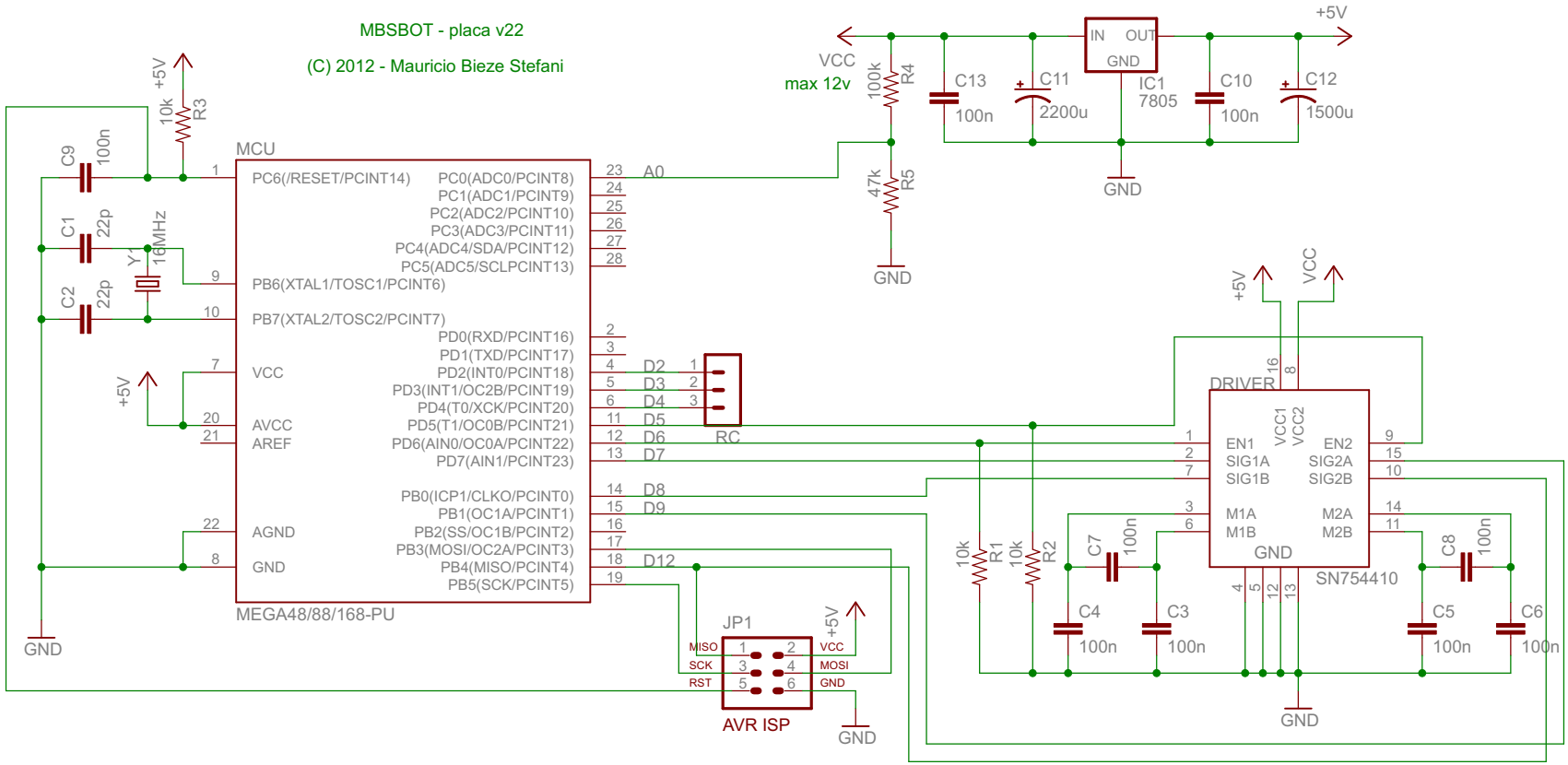

20/07/2012 21:30:04 D:\prg\mbsbot\eagle\placa_v4.sch (Sheet: 1/1)