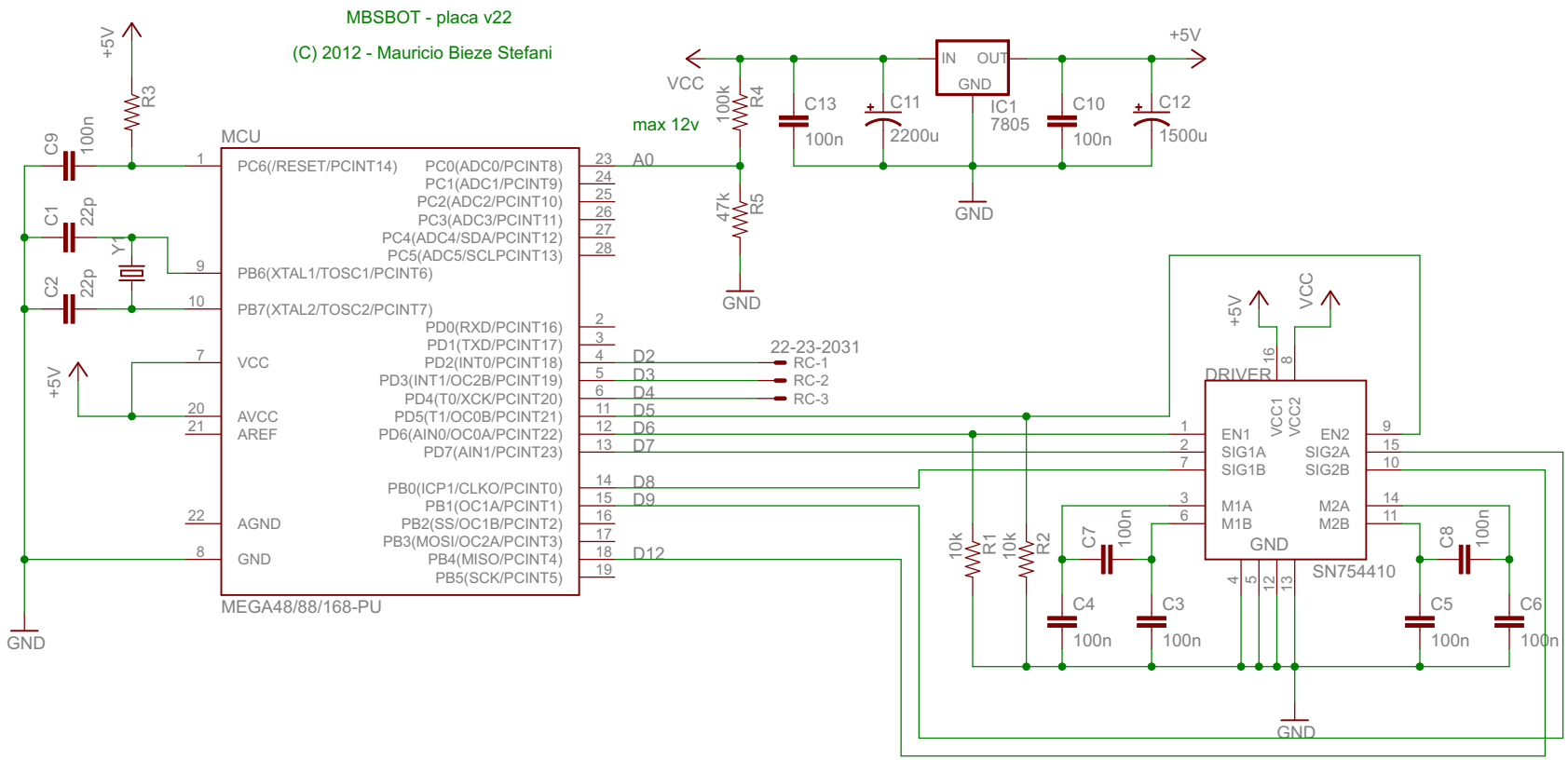

14/07/2012 16:36:53 D:\prg\mbsbot\eagle\placa_v4.sch (Sheet: 1/1)