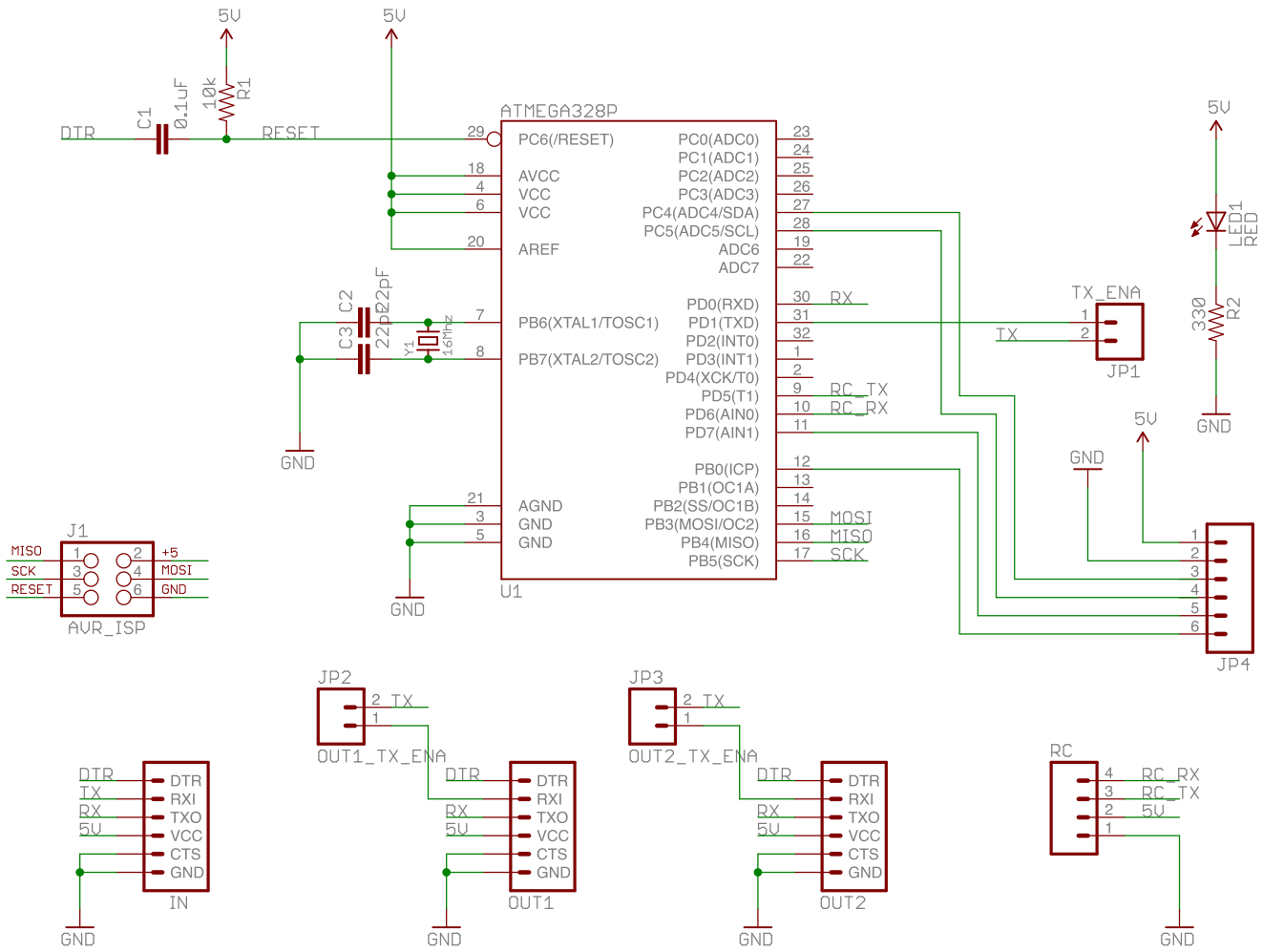
5V
5V
DTR
C1
0.1uF
10k
R1
RESET
ATMEGA328P
PC6(/RESET)
AVCC
VCC
VCC
AREF
PB6(XTAL1/TOSC1)
PB7(XTAL2/TOSC2)
AGND
GND
GND
PC0(ADC0)
PC1(ADC1)
PC2(ADC2)
PC3(ADC3)
PC4(ADC4/SDA)
PC5(ADC5/SCL)
ADC6
ADC7
PD0(RXD)
PD1(TXD)
PD2(INT0)
PD3(INT1)
PD4(XCK/T0)
PD5(T1)
PD6(AIN0)
PD7(AIN1)
PB0(ICP)
PB1(OC1A)
PB2(SS/OC1B)
PB3(MOSI/OC2)
PB4(MISO)
PB5(SCK)
RX
TX
RC_TX
RC_RX
MOSI
MISO
SCK
U1
C2
22pF
C3
22pF
Y1
16Mhz
GND
GND
5V
LED1
RED
330
R2
GND
TX_ENA
JP1
5V
GND
JP4
J1
MISO
SCK
RESET
+5
MOSI
GND
AVR_ISP
JP2
TX
OUT1_TX_ENA
JP3
TX
OUT2_TX_ENA
DTR
TX
RX
5V
DTR
RXI
TXO
VCC
CTS
GND
IN
GND
DTR
RX
5V
OUT1
GND
DTR
RX
5V
OUT2
GND
RC
RC_RX
RC_TX
5V
GND