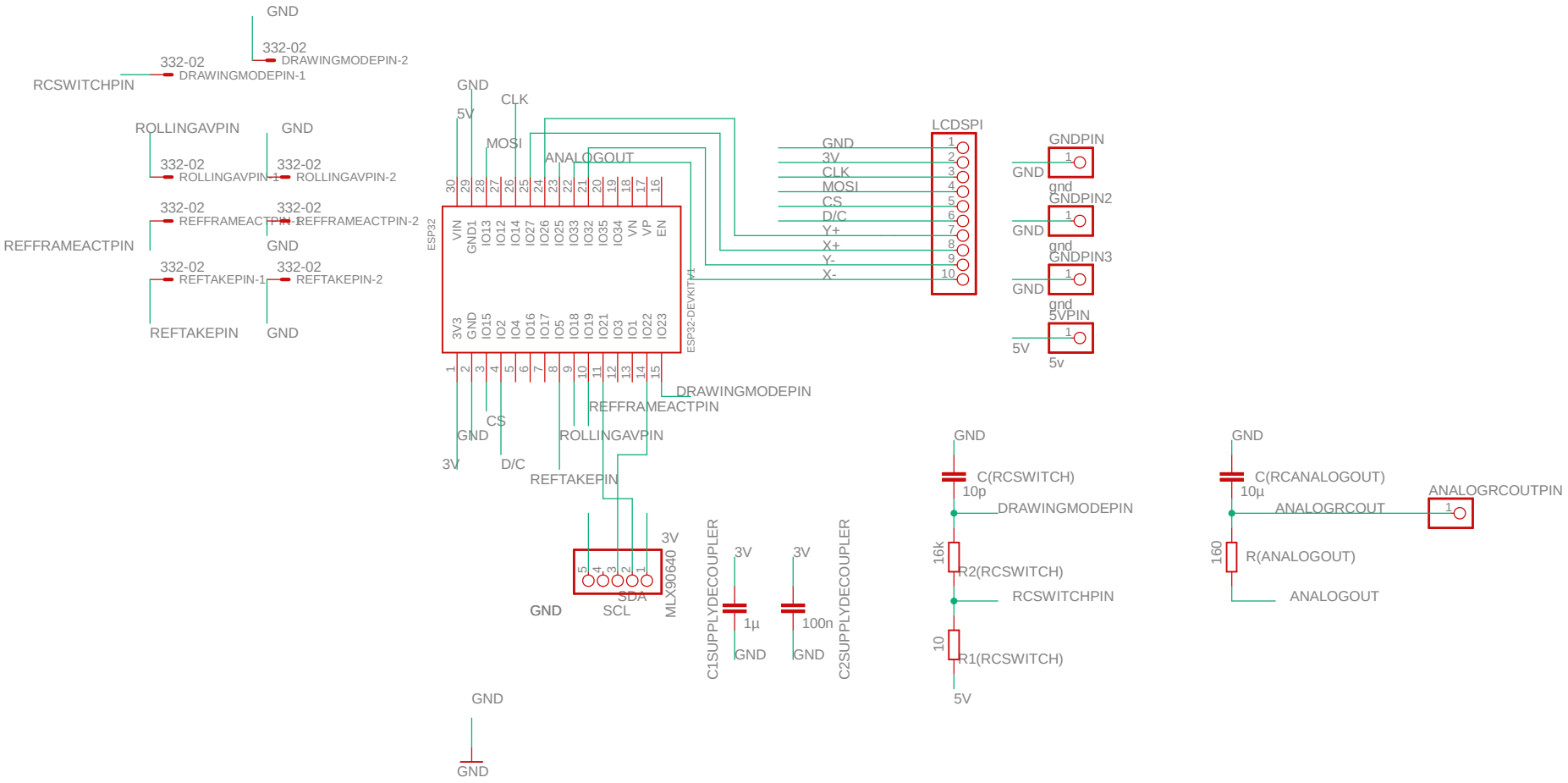
GND
332-02
DRAWINGMODEPIN-2
RCSWITCHPIN
332-02
DRAWINGMODEPIN-1
ROLLINGAVPIN
GND
332-02
ROLLINGAVPIN-1
332-02
ROLLINGAVPIN-2
332-02
REFFRAMEACTPIN-1
332-02
REFFRAMEACTPIN-2
REFFRAMEACTPIN
GND
332-02
REFTAKEPIN-1
332-02
REFTAKEPIN-2
REFTAKEPIN
GND
ESP32
ESP32-DEVKITV4
VIN
GND1
IO13
IO12
IO14
IO27
IO26
IO25
IO33
IO32
IO35
IO34
VN
VP
EN
3V3
GND
IO15
IO2
IO4
IO16
IO17
IO5
IO18
IO19
IO21
IO3
IO1
IO22
IO23
GND
5V
CLK
MOSI
ANALOGOUT
DRAWINGMODEPIN
REFFRAMEACTPIN
ROLLINGAVPIN
REFTAKEPIN
GND
3V
CS
D/C
LCDSPI
GND
3V
CLK
MOSI
CS
D/C
Y+
X+
Y-
X-
GNDPIN
GND
gnd
GNDPIN2
GND
gnd
GNDPIN3
GND
gnd
5VPIN
5V
5v
MLX90640
SDA
SCL
GND
3V
C1SUPPLYDECOUPLER
1µ
GND
3V
100n
GND
C2SUPPLYDECOUPLER
GND
C(RCSWITCH)
10p
DRAWINGMODEPIN
16k
R2(RCSWITCH)
RCSWITCHPIN
10
R1(RCSWITCH)
5V
GND
C(RCANALOGOUT)
10µ
ANALOGRCOUT
ANALOGRCOUTPIN
160
R(ANALOGOUT)
ANALOGOUT
GND
GND