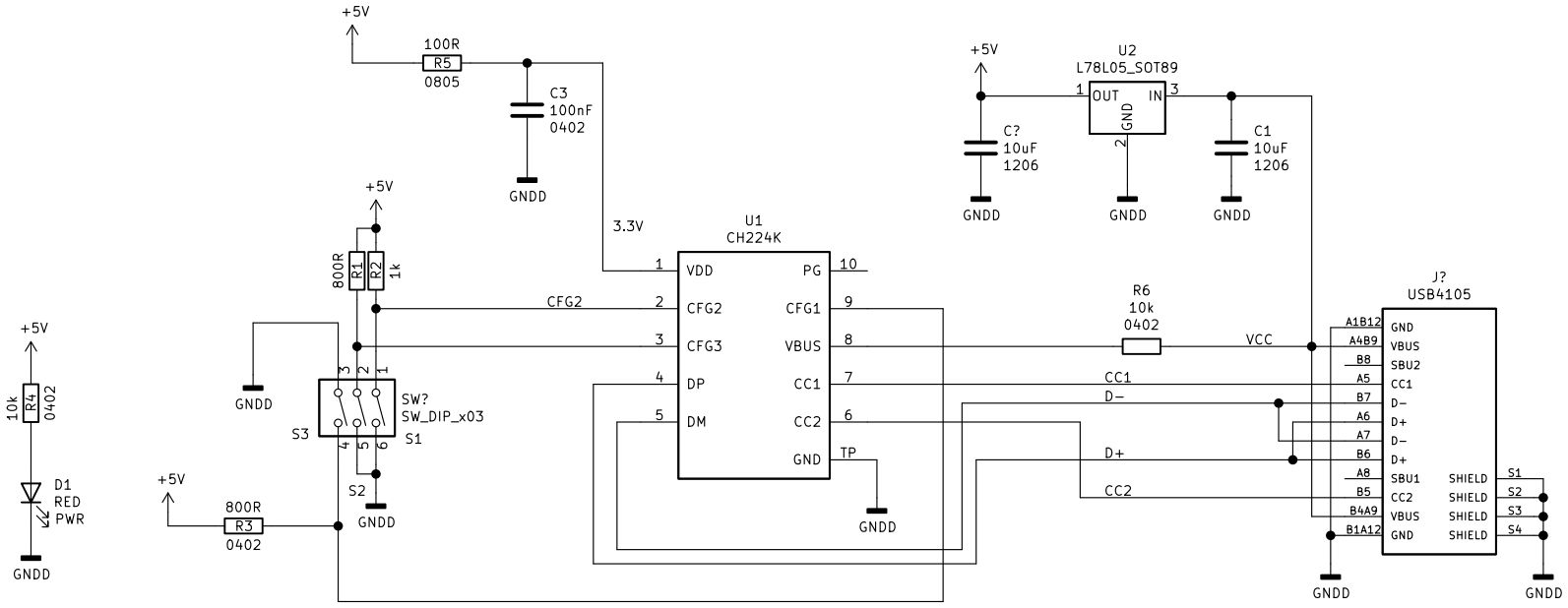

	CFG2	CFG3	CFG1
	S1	S2	S3
5V	1	1	0
9V	1	1	1
12V	1	0	1
15V	0	0	1
20V	0	1	1

Martin Vit

Sheet: /
File: USB−C_PD.sch

Title: USB−C Power delivery supply

Size: A4	Date: 2023−08−27	**Rev: 1.0**
KiCad E.D.A. kicad (5.1.8)−1		Id: 1/1