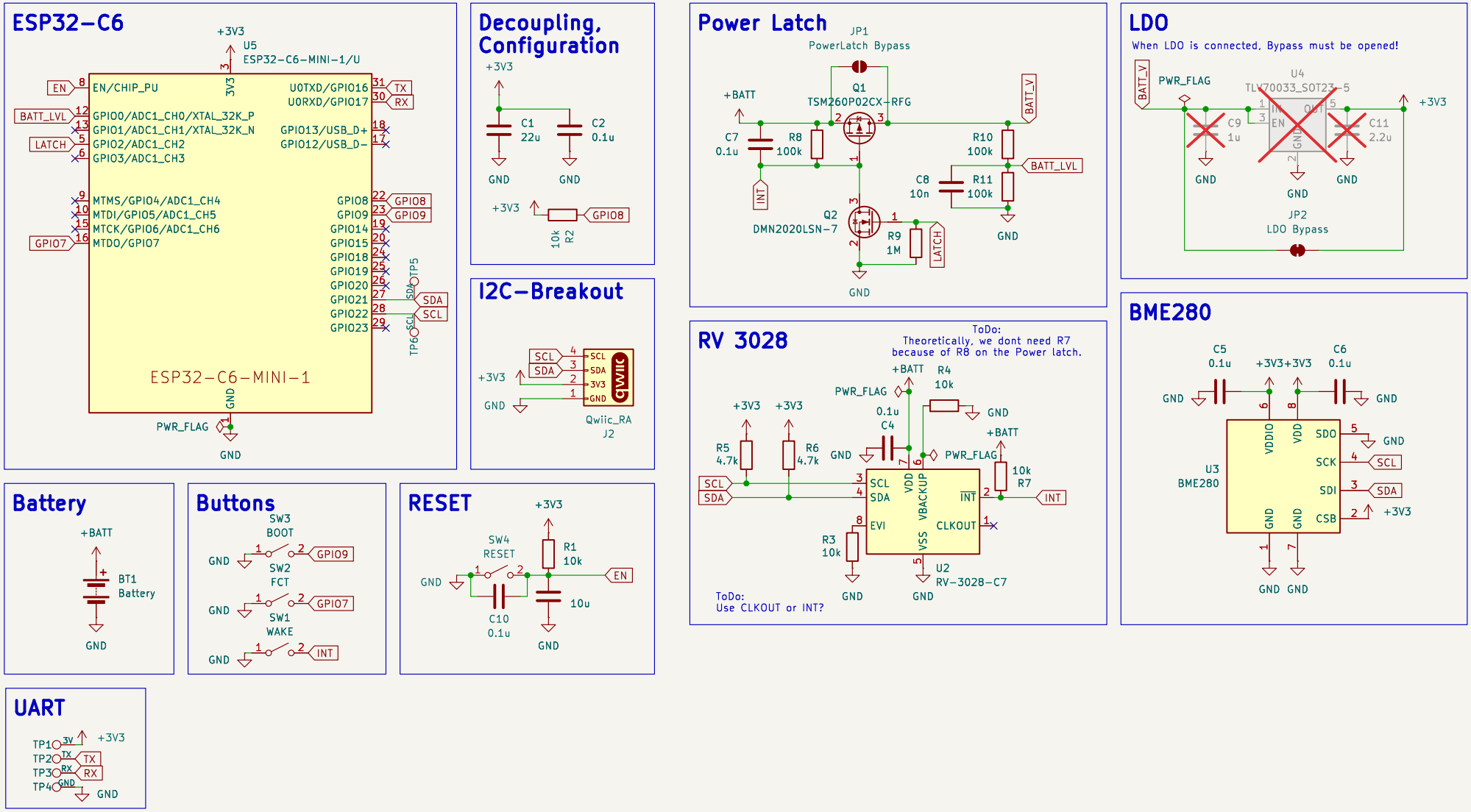
ESP32-C6
+3V3
U5
ESP32-C6-MINI-1/U
EN
BATT_LVL
LATCH
GPIO7
EN/CHIP_PU
GPIO0/ADC1_CH0/XTAL_32K_P
GPIO1/ADC1_CH1/XTAL_32K_N
GPIO2/ADC1_CH2
GPIO3/ADC1_CH3
MTMS/GPIO4/ADC1_CH4
MTDI/GPIO5/ADC1_CH5
MTCK/GPIO6/ADC1_CH6
MTDO/GPIO7
U0TXD/GPIO16
U0RXD/GPIO17
GPIO13/USB_D+
GPIO12/USB_D-
GPIO8
GPIO9
GPIO14
GPIO15
GPIO18
GPIO19
GPIO20
GPIO21
GPIO22
GPIO23
TX
RX
SDA
SCL
TP5
TP6
ESP32-C6-MINI-1
PWR_FLAG
GND
Decoupling, Configuration
C1
22u
C2
0.1u
R2
10k
I2C-Breakout
Qwiic_RA
J2
Power Latch
JP1
PowerLatch Bypass
Q1
TSM260P02CX-RFG
+BATT
C7
0.1u
R8
100k
INT
Q2
DMN2020LSN-7
R9
1M
R10
100k
R11
100k
C8
10n
BATT_V
BATT_LVL
LDO
When LDO is connected, Bypass must be opened!
U4
TLV70033_SOT23-5
C9
1u
C11
2.2u
JP2
LDO Bypass
RV 3028
ToDo:
Theoretically, we dont need R7
because of R8 on the Power latch.
R4
10k
R5
4.7k
R6
4.7k
C4
0.1u
R7
10k
R3
10k
U2
RV-3028-C7
ToDo:
Use CLKOUT or INT?
BME280
C5
0.1u
C6
0.1u
U3
BME280
Battery
BT1
Battery
Buttons
SW3
BOOT
SW2
FCT
SW1
WAKE
RESET
SW4
RESET
R1
10k
C10
0.1u
10u
UART
TP1
TP2
TP3
TP4