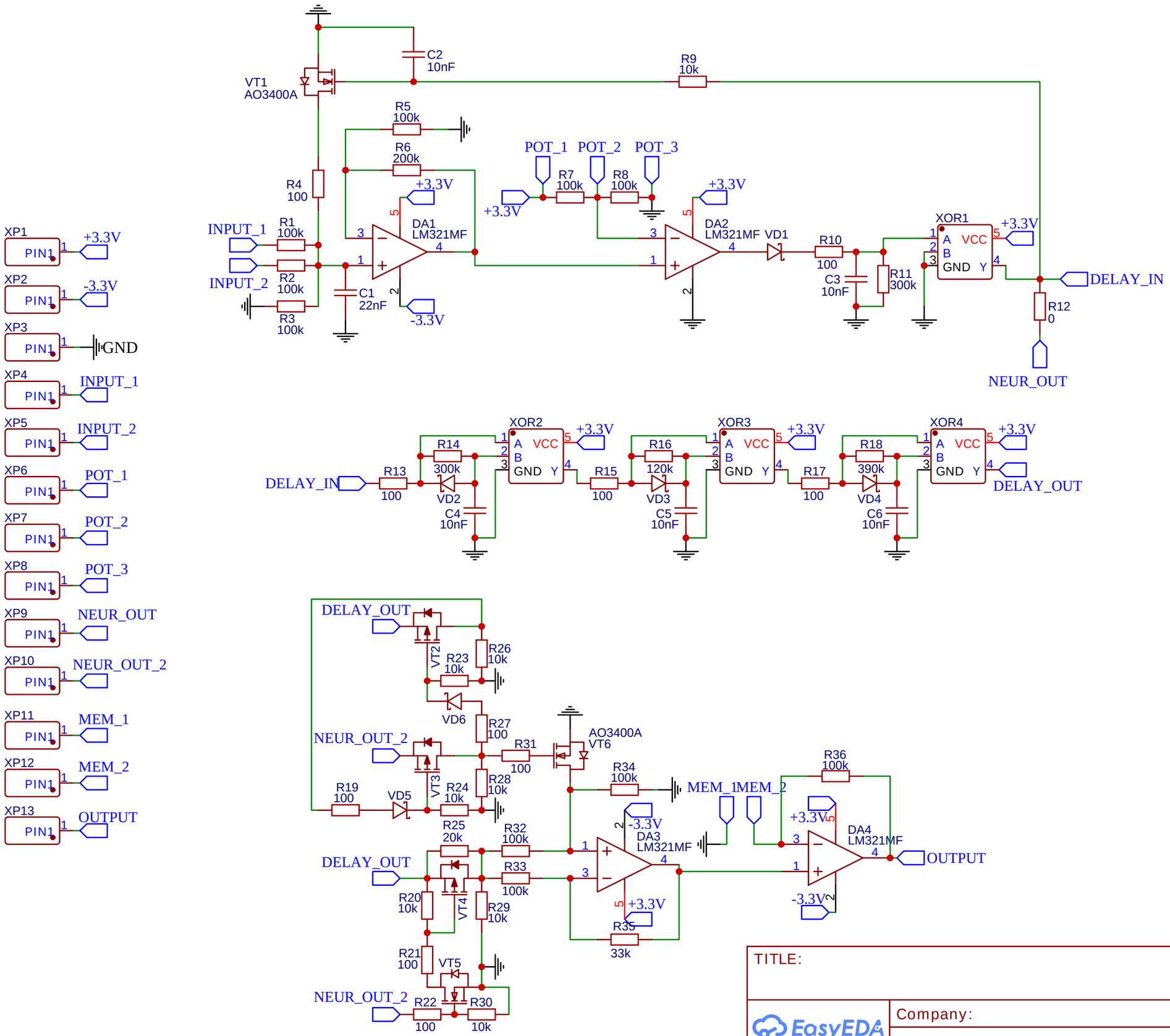

TITLE:

REV: 1.0

Company:

Sheet: 1/1

Date:

Drawn By: