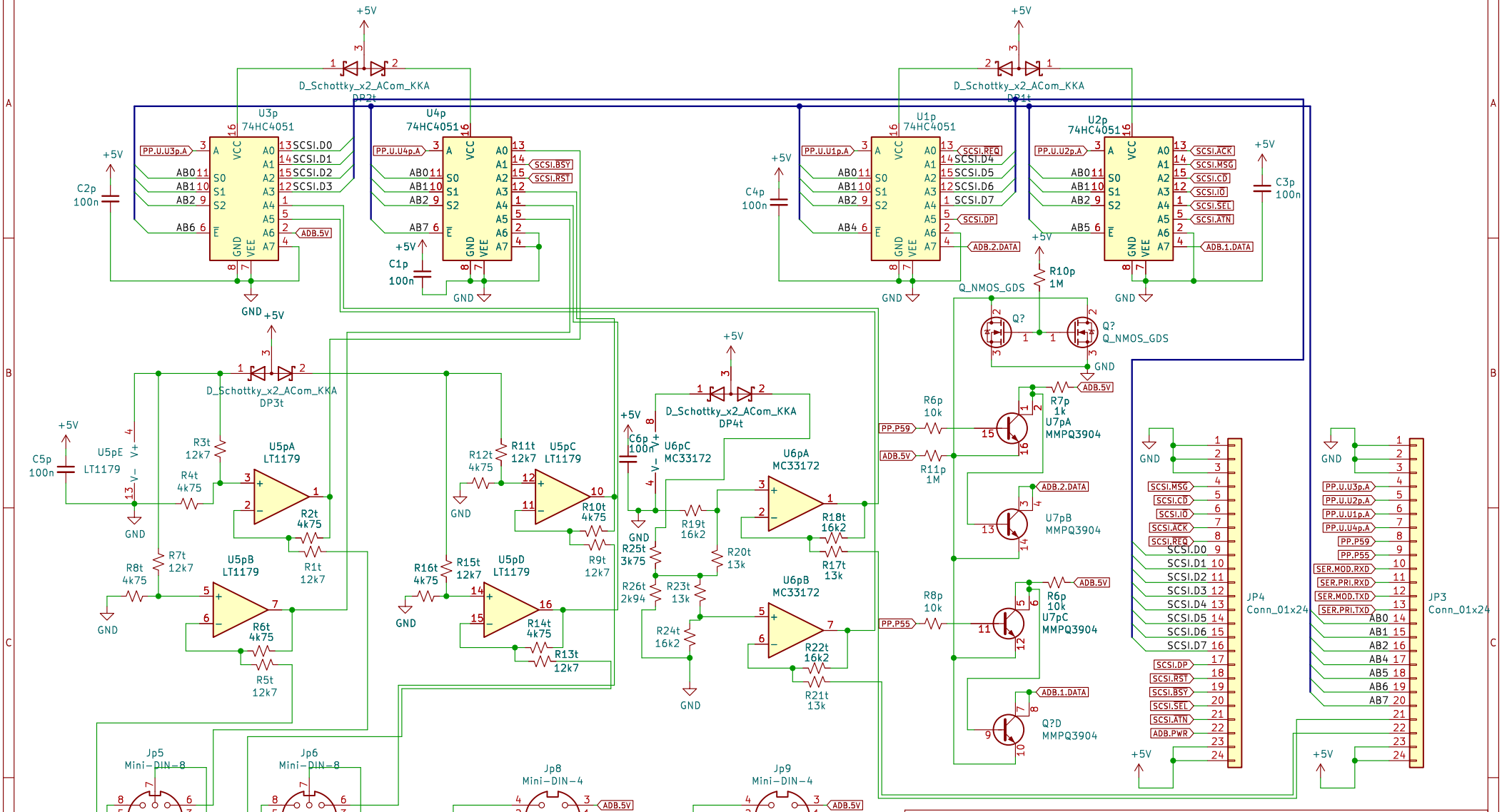

Unit drawn provided by jajan547
p/n: 077-0713
max1zzz

Sheet: /
File: Port_Pack_Top_PCB.sch

Title: TechStep Port Pack – Top PCB

Size: A4	Date: 2022-11-20	**Rev: 1.0A**
KiCad E.D.A. kicad 7.0.9		Id: 1/1