PHYC10009 Foundations of Physics – lecture 11

"Good morning, and welcome to The Wonders of Physics."

Professor Martin Sevior

martines@unimelb.edu.au

Physics, Room 501

(Please switch your mobile phone to silent)

Doing net work changes kinetic energy

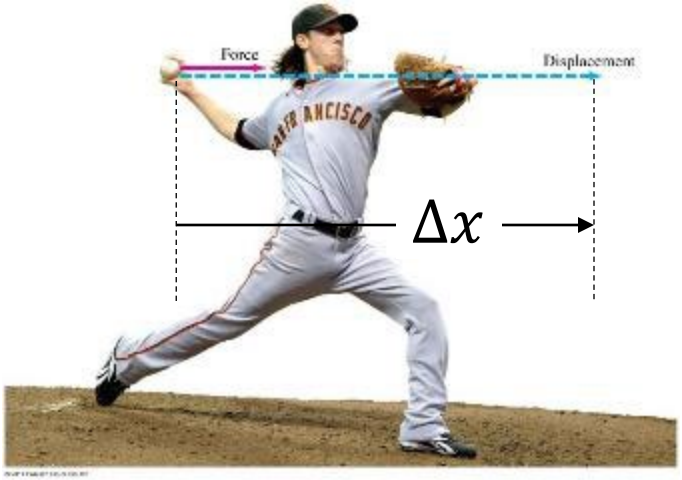

- The net external force is the vector sum of all forces acting on the system.
- The total (net) work is the sum of the work done by all of the forces acting on the system.
- This example: a constant net force acts as the ball has displacement Δx.

$$2a\Delta x = v_f^{\,2} - v_i^{\,2}$$

$$2\frac{F_{net}}{m}\Delta x = v_f^{\,2} - v_i^{\,2}$$

$$F_{net}\Delta x = \frac{1}{2}mv_f^{\,2} - \frac{1}{2}mv_i^{\,2}$$

Doing (net) work causes the system to speed up or slow down.

$$W_{net} = \Delta K$$

Work-kinetic energy theorem

Work done by gravity G6.4

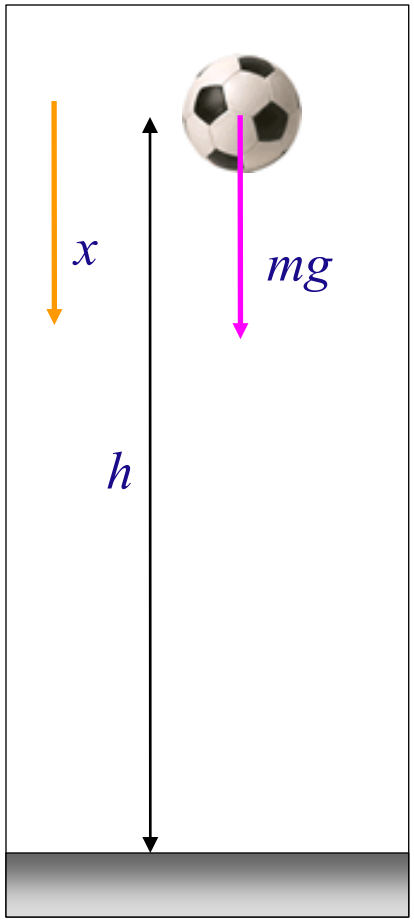

A ball is dropped from rest at height *h*. What is its speed when it hits the ground?

Using Newton's laws:

$$a = \frac{F_{net}}{m} = \frac{mg}{m} = g$$

$$2a\Delta x = v_f^{\,2} - v_i^{\,2}$$

$$2gh = v_f^{\,2} - 0^2$$

$$v_f = \sqrt{2gh}$$

Using energy:

$$W = \Delta K$$

$$W = F\Delta x = mgh$$

$$\Delta K = \frac{1}{2}mv_f^{\,2} - \frac{1}{2}mv_i^{\,2}$$

$$mgh = \frac{1}{2}mv_f^{\,2}$$

$$v_f = \sqrt{2gh}$$

Work done by gravity on ball = mgh

Why use energy?

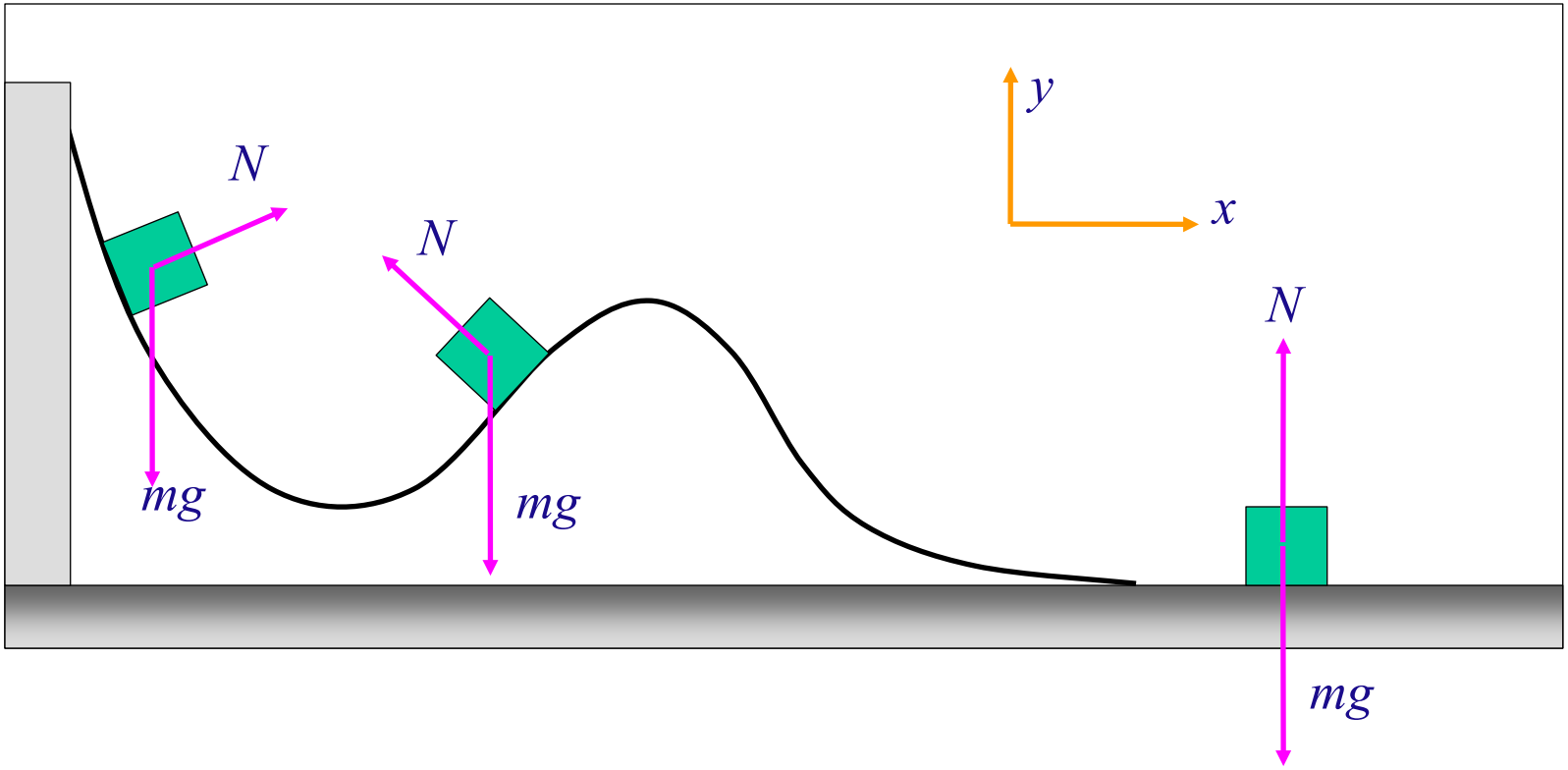

Block slides down a frictionless slide. Speed at the end?

- This is a 2-dimensional problem, so need to look at forces in two directions (x, y) if we use Newton's laws.
- Direction and magnitude of *N* changes during the motion, so the acceleration is not constant in either direction.

Why use energy?

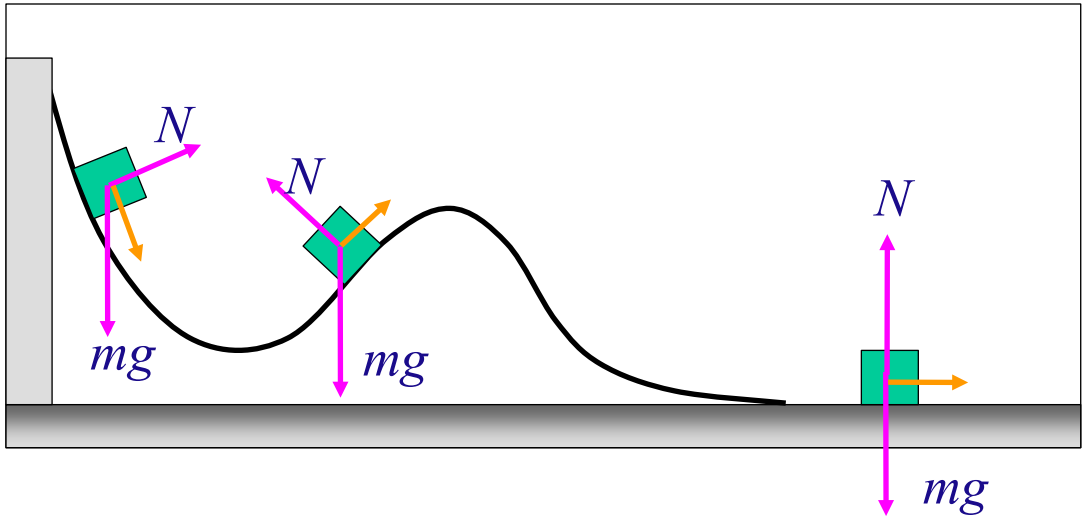

The energy solution:

- For any small displacement along the track, the normal force is perpendicular to the displacement. Therefore it does no work on the block.
- Weight force is *constant* throughout the motion, and we know how to calculate the work done by a constant force for a given total displacement.
- Can then use: $W = \Delta K$

Work done by gravity (in general)

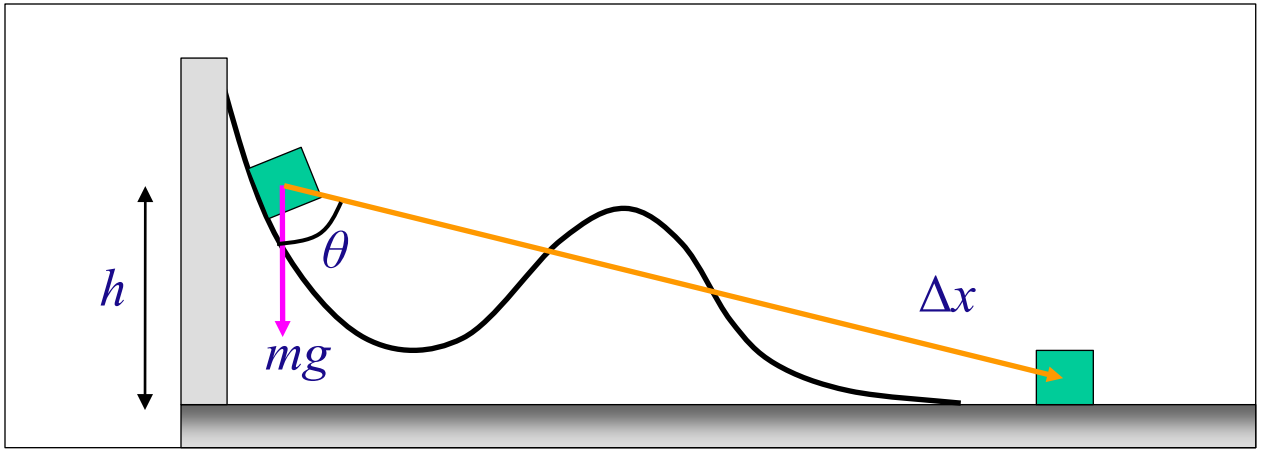

Gravitational Potential Energy = mgh

$$W = (mg)(\Delta x)\cos\theta = mgh$$

$$W = \Delta K \qquad mgh = \frac{1}{2}mv_f^2$$

Just Remember:
Potential Energy (mgh) is
Converted to Kinetic Energy ($\frac{1}{2}mv_f^2$)

- The work done by gravity is always $W = mgh$, where h is the *vertical* downwards distance travelled by the system.
  - Work done is negative if the system moves upwards.
  - This is transformed to positive POTENTIAL ENERGY
- Work done is independent of the particular path the object took – only the initial and final positions matter.

Stopped pendulum

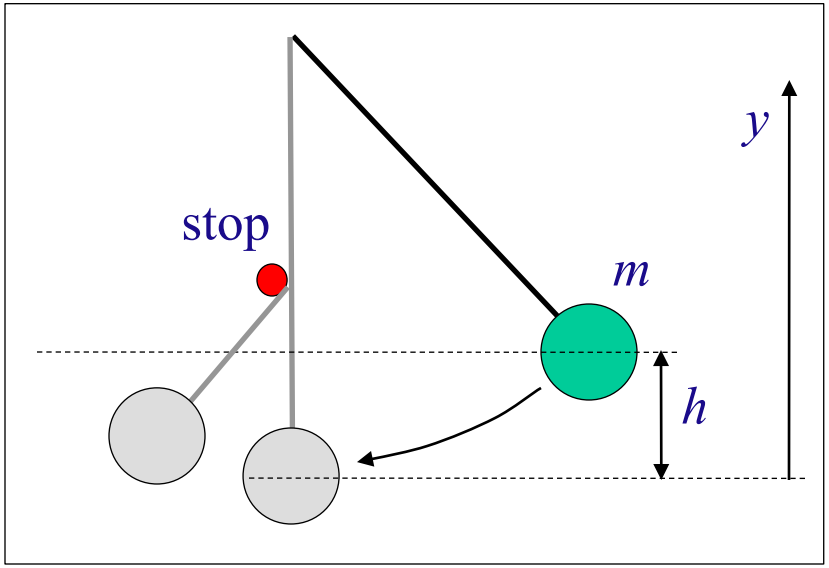

A mass *m* is attached to a light (massless) string and released at height *h* above the lowest point of its swing. Neglecting friction and drag, how high does the mass rise above its lowest level after the string hits the stop?

(a) Higher,

(b) same height or

(c) lower than *h*?

Work it out and give your answer at:

PollEv.com/martinsevior

PHYC10009 week4

Visual settings

Edit

When poll is active, respond at **PollEv.com/martinsevior**

Text **MARTINSEVIOR** to **+61 480 025 509** once to join

Stopped Pendulum

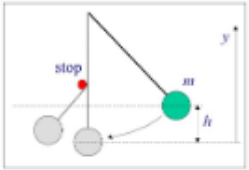

A mass m is attached to a light (massless) string and released at height h above the lowest point of its swing. How high does the mass rise above its lowest level after the string hits the stop?
(a) Higher,
(b) same height or
(c) lower than h?

(a) Higher

(b) same height

(c) lower than

Powered by Poll Everywhere

Elastic potential energy of a spring - G6.4

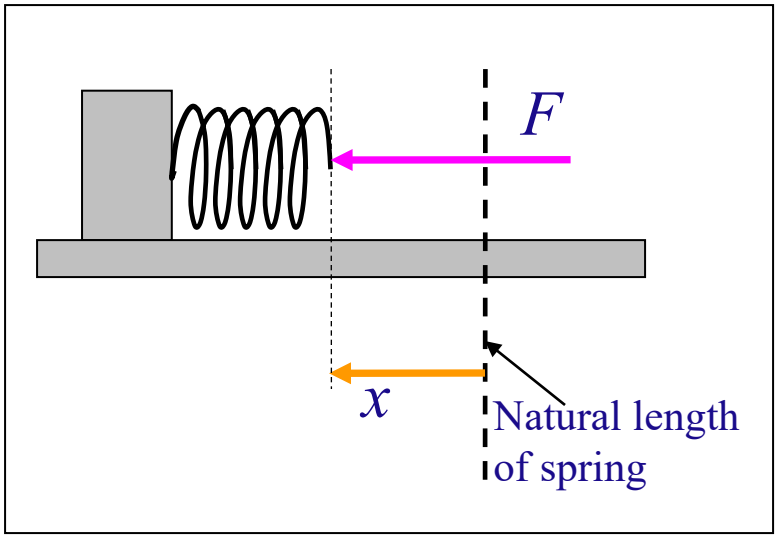

- Push on a spring to compress it by distance x from its natural length (the spring starts and ends at rest).
- Choose system = the spring. (Not isolated, due to force of the push.)
- Choose $U_i = 0$ at $x = 0$ (the initial length).
- Conservation of energy:
  - $\Delta U = U_f - U_i = W$

Newton III: force of hand on spring = force of spring on hand.

To maintain compression x, must push with force $F = kx$. This force varies with the compression x.

Problem: $W = F\Delta x$ applies *only* when the force F is constant for the entire displacement Δx , so how can we find the work done on the spring?

Elastic potential energy of a spring – G6.4

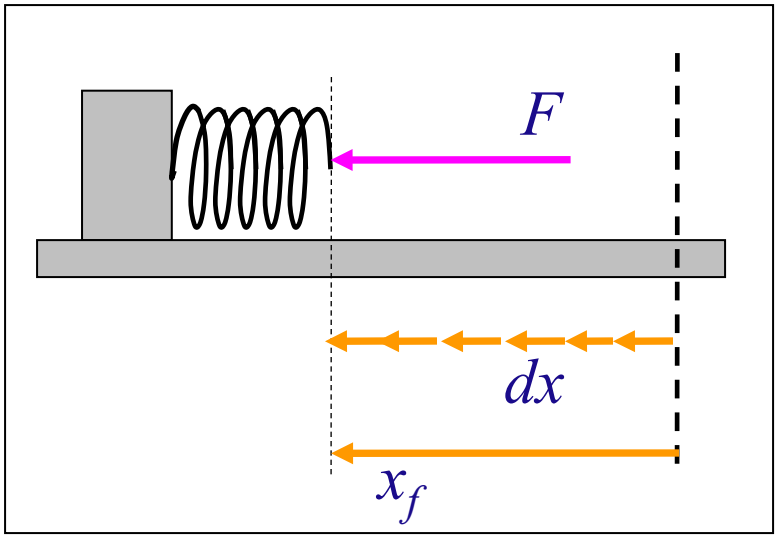

- Solution: break the total displacement into infinitesimal small displacements, over each of which the force is approximately constant.
- Amount of work done over one of these small displacements:

$$dW = F(x)dx = kx\,dx$$

- Total work done: integrate

$$W = \int dW = \int_0^{x_f} kx\,dx$$

$$W = \left[\frac{1}{2}kx^2\right]_0^{x_f} = \frac{1}{2}kx_f^{\,2}$$

- Spring potential energy (define $U_s = 0$ when spring is at its natural length):

$$U_s = \frac{1}{2}kx^2$$

Note: x is the total *compression* or *extension* of the spring in this formula.

Example problem involving friction

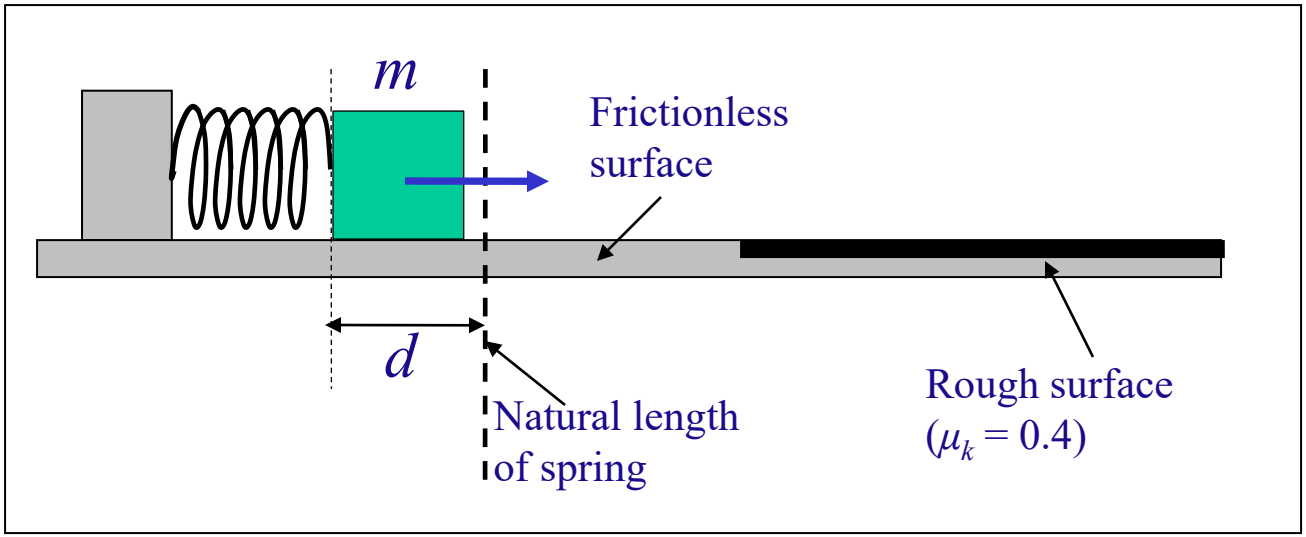

A block of mass m = 2.0 kg is pushed against a spring (k = 10 N/m) and compresses it a distance d = 1.0 m from its natural length. The block is then released from rest. The spring pushes on the block, causing it initially to slide along a frictionless surface. The block then moves across a rough surface, and friction brings it to rest.

- How far does the block slide along the rough surface before it stops?

Example problem involving friction

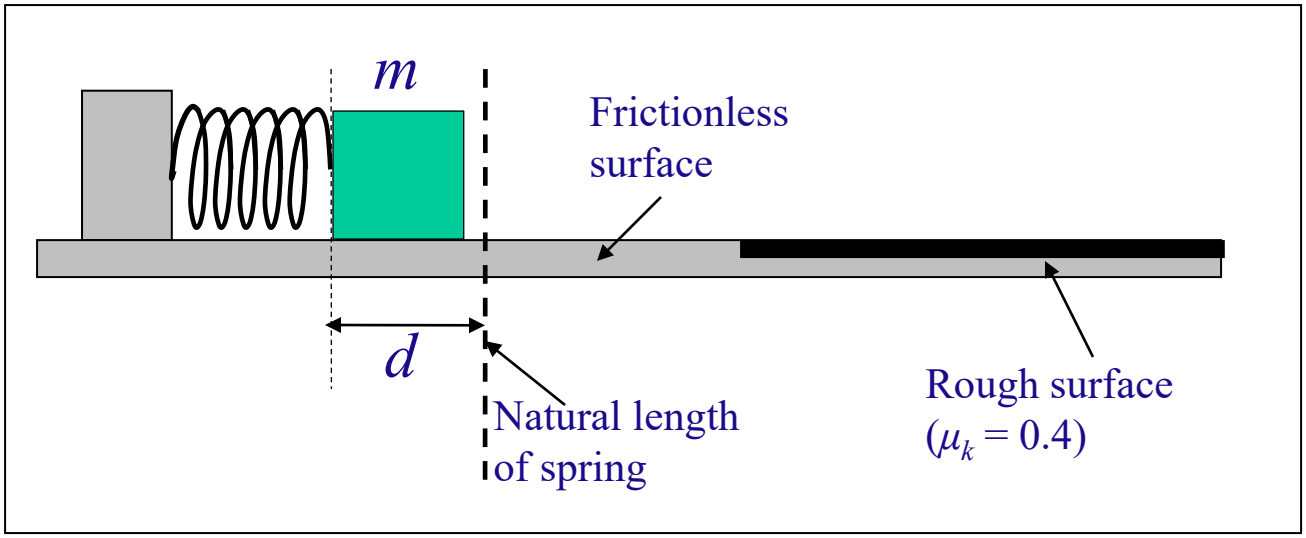

Split problem into two parts:

- Initial acceleration of the block by the spring and motion across frictionless surface.
- Sliding to a stop on the rough surface.

Initial acceleration by the spring

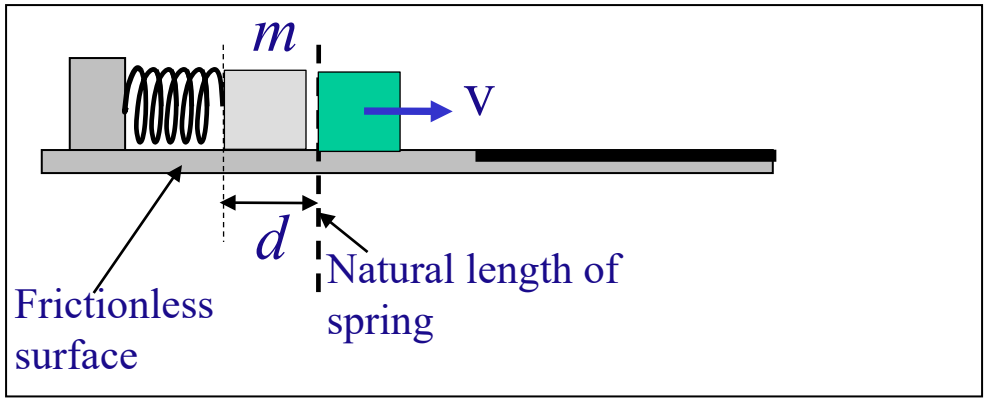

Velocity of block just after it leaves the spring:

- Choose system = spring + block.
- $E = K + U_s$. System is isolated (spring force is internal, normal force and weight add to give zero net external force), so energy is conserved.

$$E_i = K + U_s = 0 + \frac{1}{2}kd^2$$

$$E_f = K + U_s = \frac{1}{2}mv^2 + 0$$

$$v = \sqrt{\frac{kd^2}{m}} = \sqrt{\frac{(10)(1.0)^2}{2.0}} = 2.2 \text{ m/s}$$

- No horizontal forces as the block is sliding on frictionless surface, so it maintains this velocity until it reaches the rough surface.

Sliding to a stop

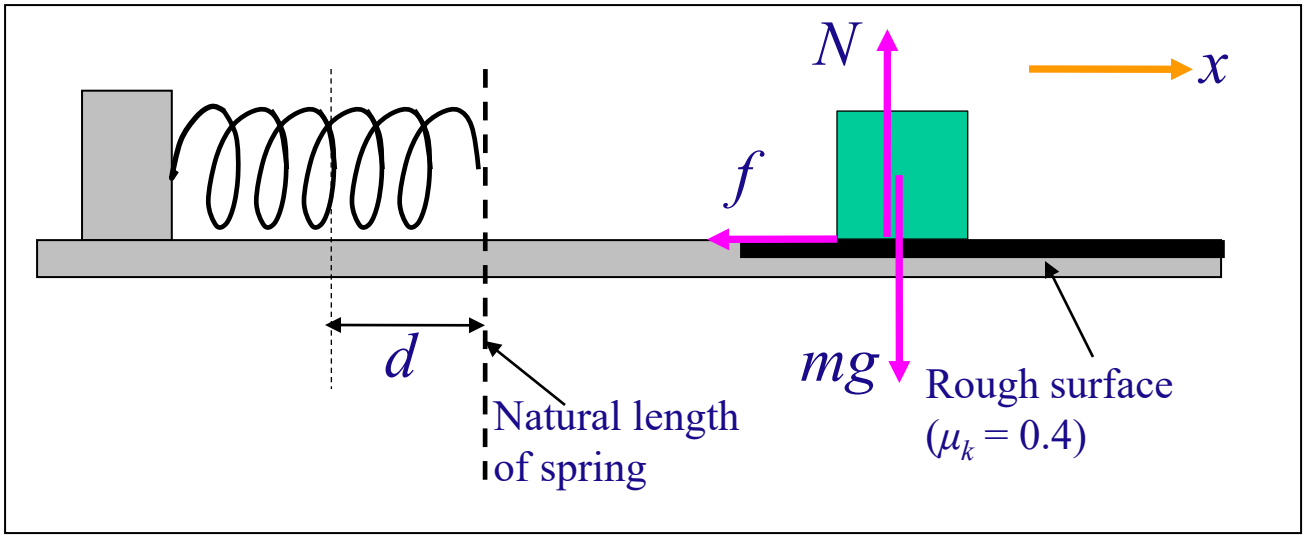

Sliding to a stop

- Work = $-f \times \Delta x = \Delta KE$
- Force due to kinetic friction, $f = \mu_k N = \mu_k mg$
- $\Delta KE = 0 - \frac{1}{2}mv^2 = -\Delta x \mu_k mg \Rightarrow \Delta x = \frac{mv^2}{2\mu_k gm} = \frac{(2.2)^2}{2\times0.4\times9.8} = 0.62$ m

Distance the block slides along the rough section.

Exam Question – 2019 Physics Fundamentals

Archery is an Olympic sport where competitors shoot arrows at a target with a bow.

The arrow is drawn back 0.80m from its initial position as shown in the figure below. The amount of force required to draw the bow increases linearly with how far it is drawn reaching a maximum of 225 N at 0.80 m displacement. Because of this, the bow can be approximated by a spring.

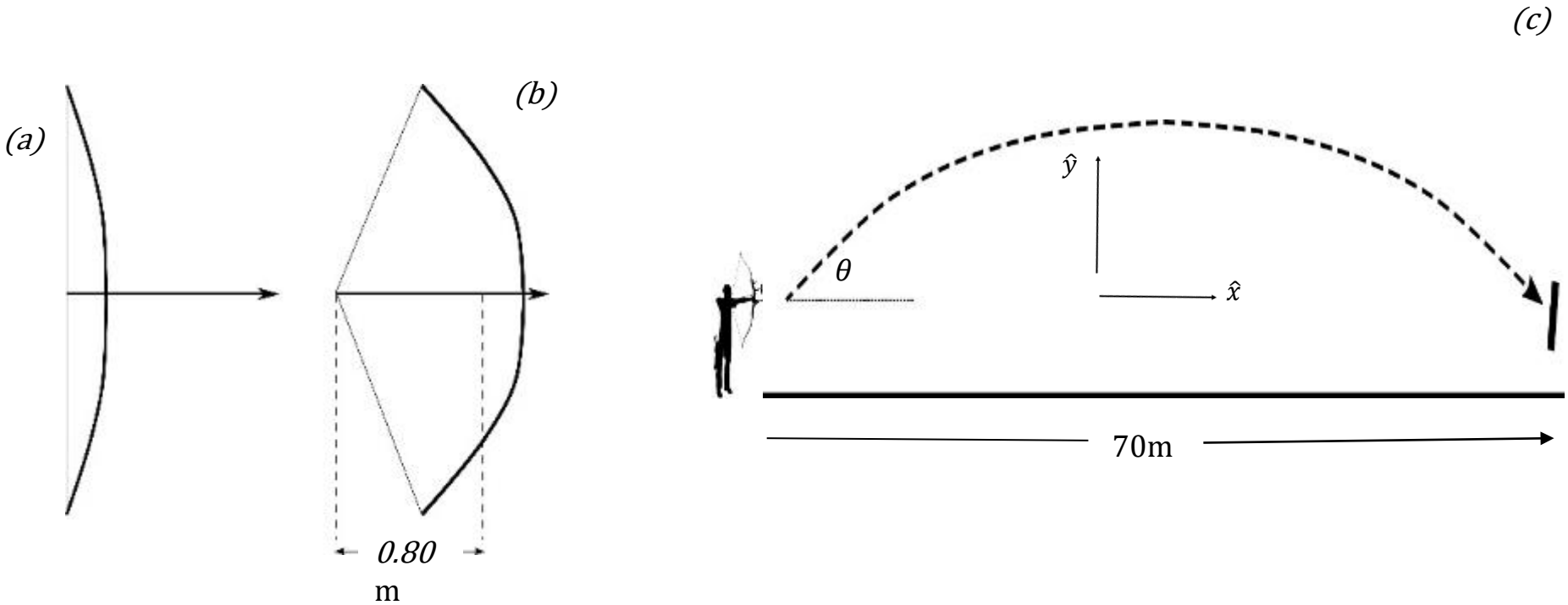

Olympic Archery exam question continued…

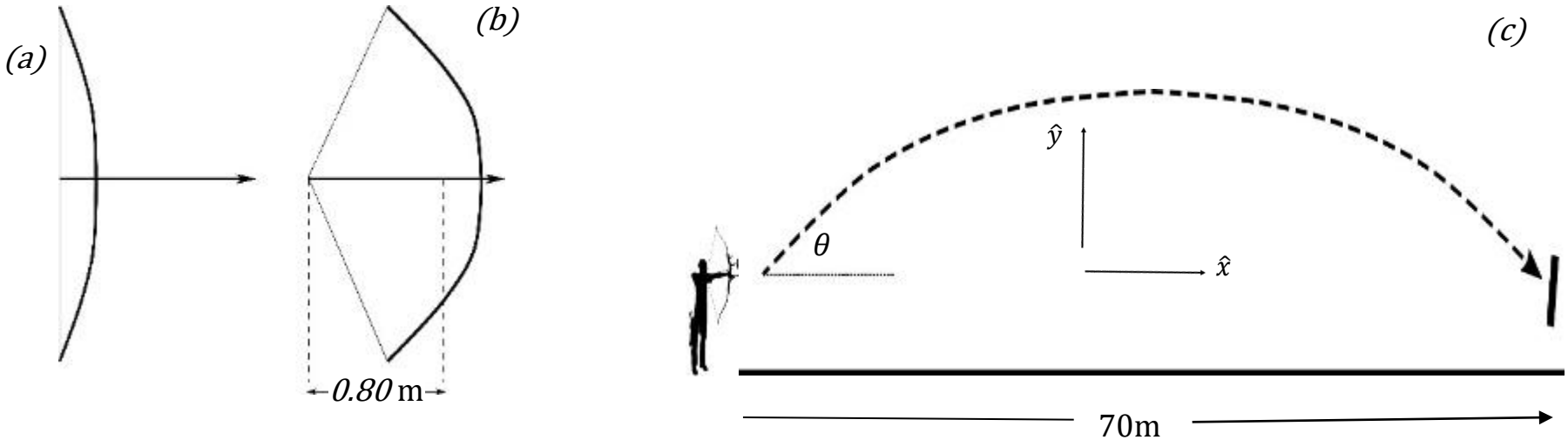

(a) Calculate the spring constant of the bow, k.

$F = -\ k\Delta x \Rightarrow -225 = -k \times 0.8 \Rightarrow k = 225/0.8 = 281.3\ N/m$

(b) Calculate the potential energy stored in the bow after drawing it 0.80 m.

$PE = \frac{1}{2}k(\Delta x)^2 = \frac{1}{2} \times 281.3 \times 0.8^2 = 90\ J$

(c) The arrow of mass $m = 0.040$ kg is released and flies to a target located 70 metres away from the archer. Find an expression for the speed of the arrow when it is first released. Your expression should make use of the spring constant k, calculated in part (a).

PE is converted to KE so

$\frac{1}{2}mv^2 = 90 \Rightarrow v^2 = 2 \times \frac{90}{0.040} \Rightarrow v^2 = \frac{180}{0.040} \Rightarrow v = \sqrt{4500} \Rightarrow v = 67ms^{-1}$

Olympic Archery exam question continued…

The arrow is fired from a height 1.5 m above the ground towards the target which is also 1.5 m above the ground and located 70 m away from the archer as shown. Its initial speed, v, is $67\ \mathrm{ms}^{-1}$. To take account of the effects of gravity, the archer aims the arrow above the target at an angle of θ to the horizontal direction. Assume $g = 9.8\ \mathrm{ms}^{-2}$.

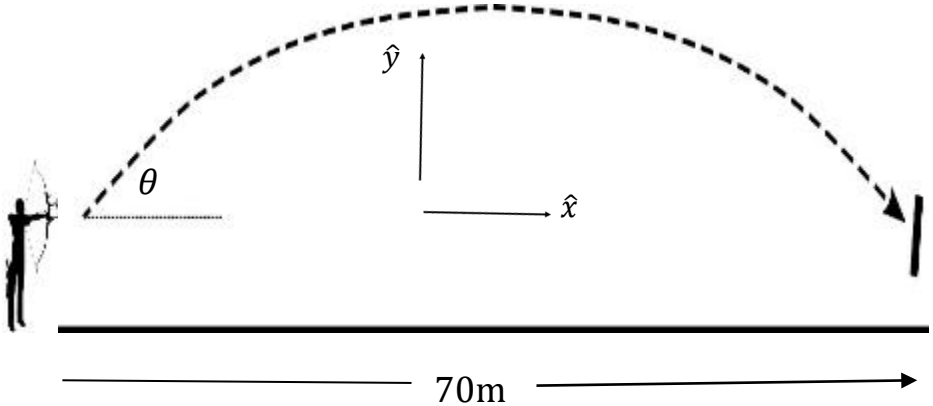

(d) Write equations for the horizontal (v_x), and vertical (v_y), components of the arrow's initial velocity in terms of the arrows speed, v, and the angle θ.

$$v_{xi} = v\cos(\theta)$$
$$v_{yi} = v\sin(\theta)$$

(e) Write expressions for horizontal and vertical displacements as a function of time, $x(t)$ and $y(t)$.

$$x(t) = x_i + v_{xi}t = v\cos(\theta)\,t$$
$$y(t) = y_i + v_{yi}t - \frac{1}{2}gt^2 = 1.5 + vsin(\theta)t - \frac{1}{2}gt^2$$

(f) Using your expression for horizontal displacement, $x(t)$, find the formula for the time, t, taken for the arrow to hit the target. Your expression should include the term $\cos(\theta)$.

$$x(t) = x_i + v_{xi}t = v\cos(\theta)\,t = 70 \Rightarrow t = \frac{70}{vcos(\theta)}$$

Olympic Archery exam question continued…

(g) Now using your expression for the vertical displacement, $y(t)$, find the formula for the time, t, for the arrow to fall back to the 1.5 m height of the target. You should expect the expression to contain the term $\sin(\theta)$.

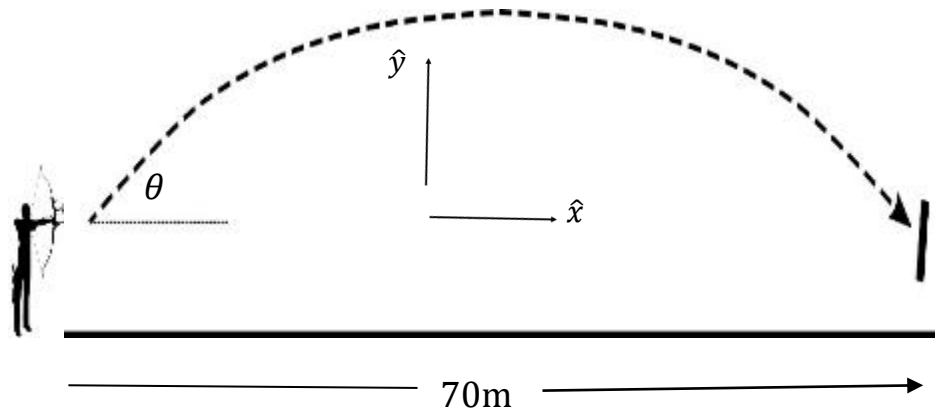

$$y(t) = 1.5 + vsin(\theta)t - \frac{1}{2}gt^2 = 1.5 => vsin(\theta)t - \frac{1}{2}gt^2 = 0 => t\left(vsin(\theta) - \frac{1}{2}gt\right) = 0$$

take the solution, $vsin(\theta) - \frac{1}{2}gt = \ 0 => t = \frac{2\,v\sin(\theta)}{g}$

(h) Since the time taken for both the vertical and horizontal parts of the motion is the same, substitute your expression for the time determined in part (f) into your formula from part (g) to the find the angle, θ, at which the arrow should be aimed. Make use of the identity $\sin(2\theta) = 2\sin(\theta)\,cos(\theta)$ to solve for θ.

$$\frac{2\,v\sin(\theta)}{g} = \frac{70}{vcos(\theta)}$$
$$=> \ v^2\,2\sin(\theta)\cos(\theta) = 70g$$
$$=> \ v^2\sin(2\theta) = 70\,g$$
$$=> \sin(2\theta) = \frac{70\,g}{v^2} = \frac{70\ \times 9.8}{67^2} = 0.153$$

$=> \ \theta = 4.4$ degrees

Vaccuum Bazooka

Pressure is Force/Unit area

Air is a fluid with a pressure of 10^5 Newtons/m^2

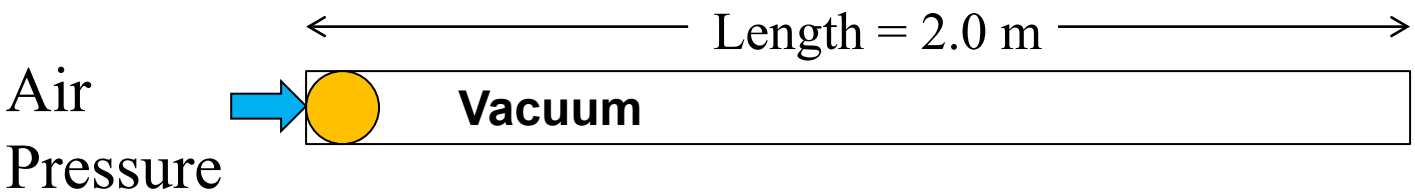

Ping-pong ball radius = 2 cm, Mass of ball = 2.7 g = 0.0027 kg
so area of ball to air = $\pi r^2 = \pi x(0.02)^2 = 1.26x10^{-3}$ m^2

Force on ball = (Air Pressure)x(area of ball) = 10^5 x(πr^2) =126 N
Work applied to ball = 126 x 2.0 = 252 J

$$KE = \frac{1}{2}mv^2 = 252\,J \Rightarrow v = \sqrt{\frac{2\times 252}{0.0027}} = 432\ ms^{-1}$$

D Mo-2 Vacuum Bazooka

Faster than the speed of Sound! (Actually can't be faster than sound)
Lets try it! (DIY http://www.richannel.org/the-vacuum-bazooka)

Vacuum Bazooka

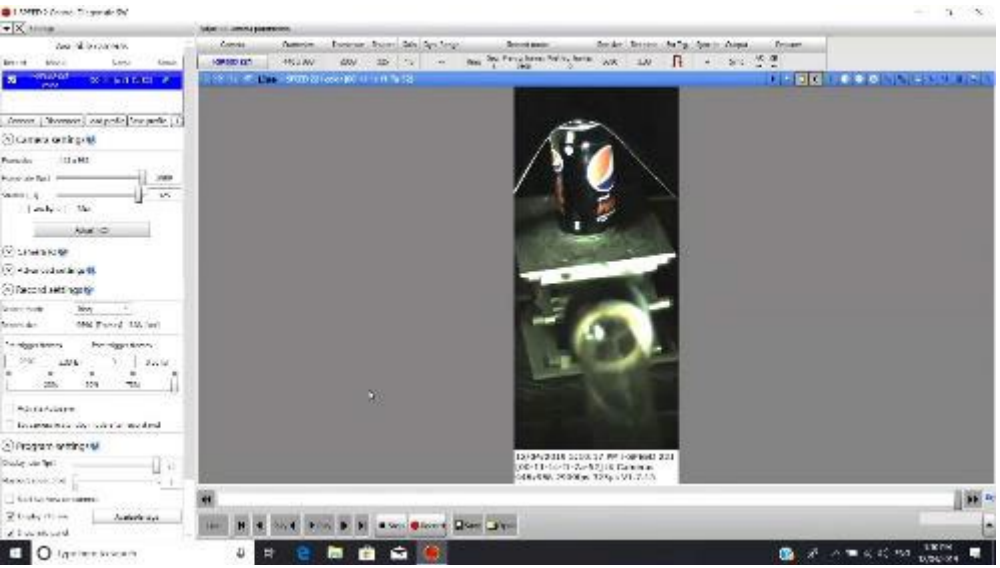

https://www.youtube.com/watch?v=Rq62uPdKSWs