PHYC10009 Physics Foundations

Electric current, Magnetism
Week 8 Lecture 2

Professor Phillip Urquijo
School of Physics
University of Melbourne

Today

- Potential and current
- Resistors
- Electric power
- Ohm's law
- Circuit diagrams
- Kirchoff's laws

Electric circuits

Batteries

- Batteries are devices which maintain a constant source of potential difference
- The energy required to “lift” charge from one terminal to the other comes from chemical reactions
- A battery is “dead” when the chemicals used to drive this are exhausted

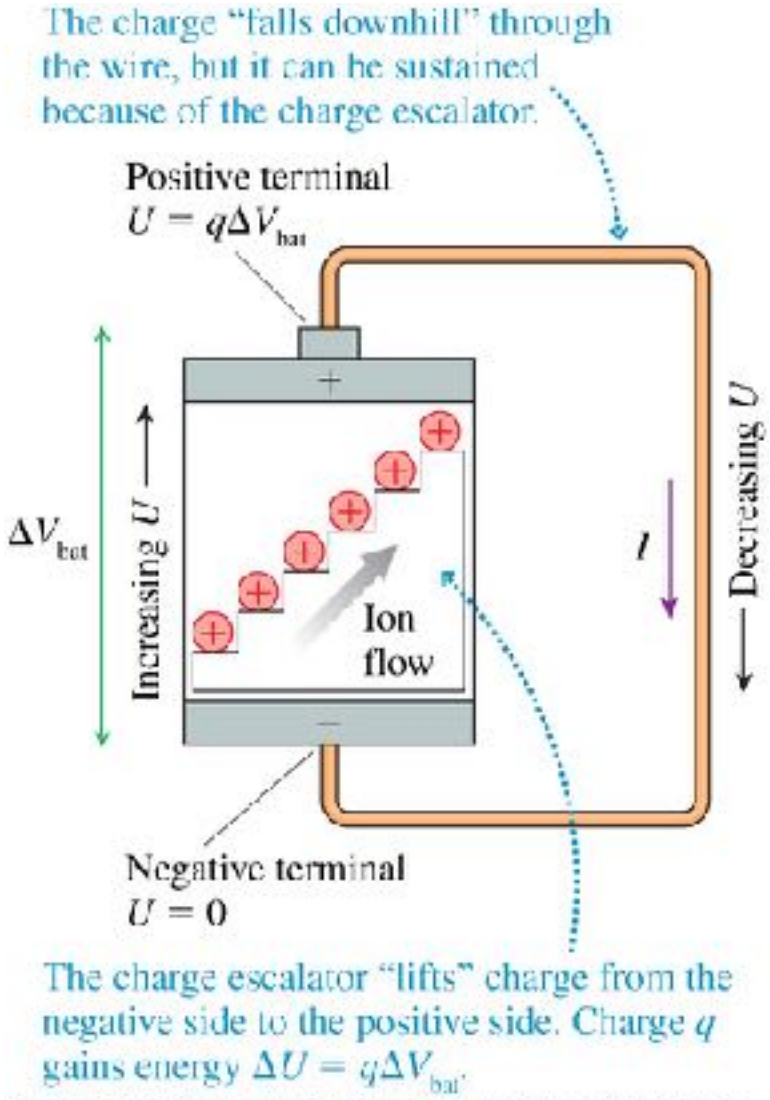

19.1 Potential and Current

- Battery maintains potential difference
- Creates electric field which pushes current around a circuit
- Voltage is across the whole wire
- The voltage decreases as we traverse the wire

Wire is not a perfect conductor: field inside not quite zero; potential not quite same everywhere

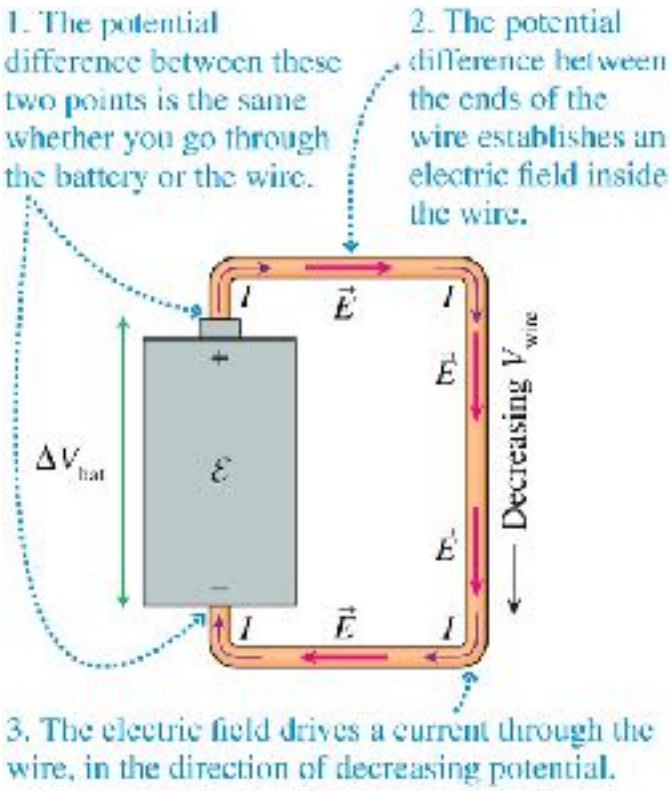

Potential and Current

- What is the relationship between current and voltage?

- Consider some experimental results:

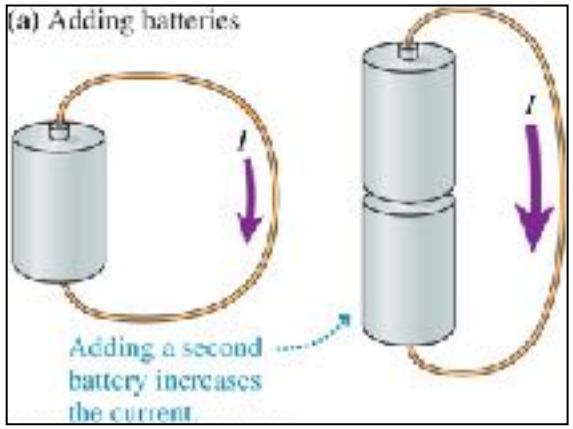

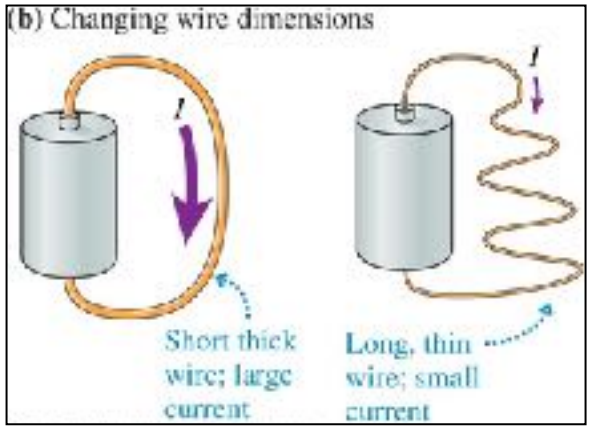

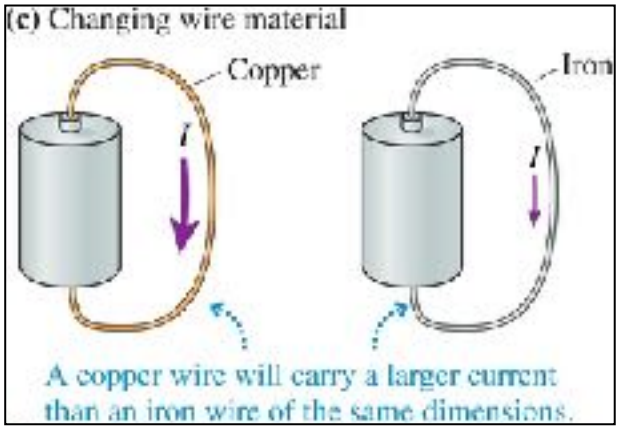

- Clearly there is a property of the wire that relates current to voltage

$$I \propto V$$

$$I = \frac{V}{R}$$

R is called the electrical resistance (unit: Ohm, Ω)

V is the voltage

I is the electric current in amperes

Georg Ohm
1789 - 1854

Resistance

- Battery: maintains voltage difference via electromotive force (emf)
- Drives currents around circuits

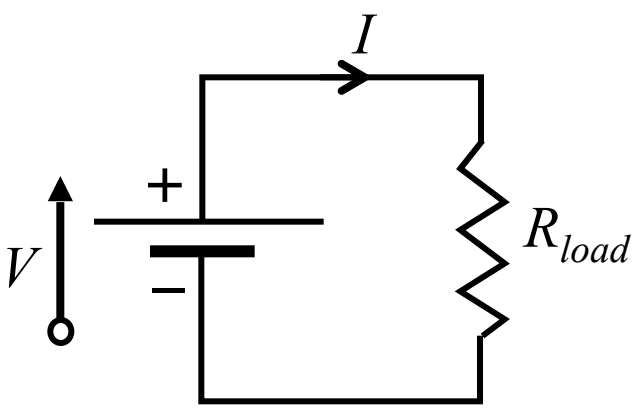

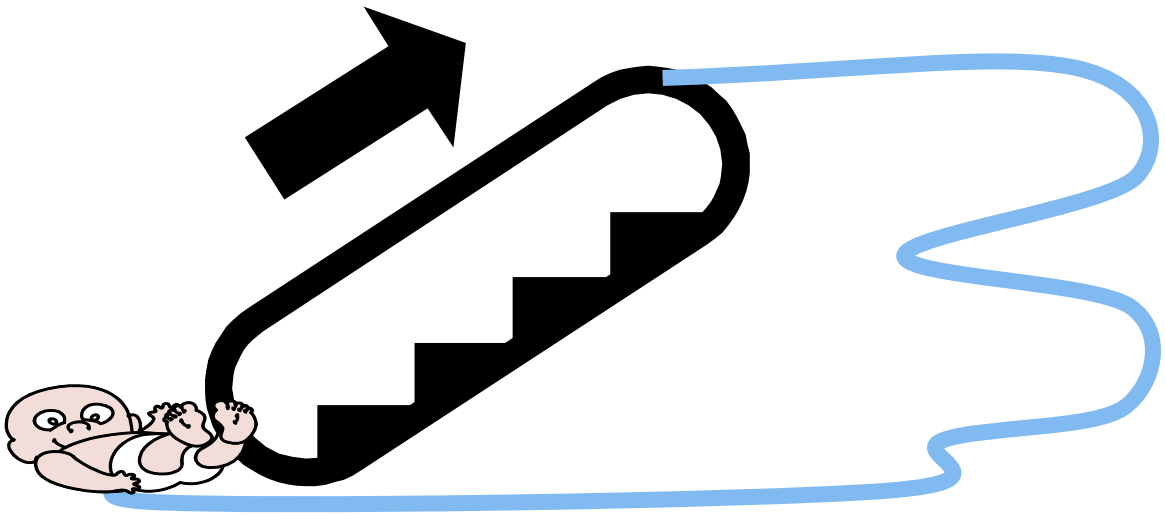

Resistance

- Battery: maintains voltage difference via electromotive force (emf)
- Drives currents around circuits

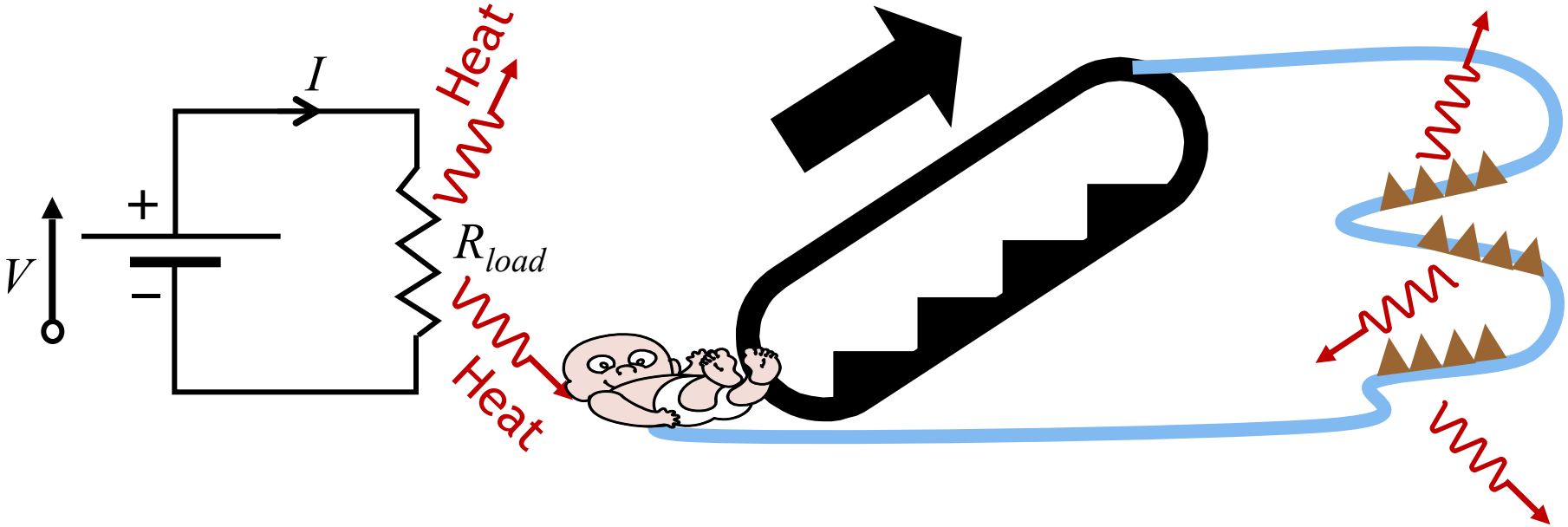

In our gravity analogy, friction dissipates the kinetic energy, the escalators take the place of the emf

Demo sausage

emf

- In an <u>ideal</u> battery the charge gains potential energy $\Delta \mathrm{PE} = W_{\mathrm{chem}}$
- W_{chem} is the work done by the chemical reactions
- Battery "emf" = $\varepsilon = \dfrac{W_{\mathrm{chem}}}{q}$ = work done per unit charge

emf = $\varepsilon = \Delta V$

- *emf* = voltage across battery if no load
  (not connected to anything)
- Unit: volts

Resistance

- Define resistance of a circuit element (e.g. wire) as $R = \frac{V}{I}$

  where V is the voltage across the device

- The SI unit of resistance is the ohm, defined as 1 ohm = $1\ \Omega$ = 1 V/A

Example: resistance of a 60W household light bulb, if current is 0.25 A?

- *Household circuits 240V, i.e.* $V = 240\ \mathrm{V}$

$$R = \frac{V}{I} = \frac{240}{0.25} = 960\ \Omega$$

Resistors

Resistor

A device designed to have a constant resistance

Values range from $< 0.0002\Omega$ to $> 500\ \mathrm{G}\Omega$ (most are in range $1\Omega - 1\mathrm{M}\Omega$)

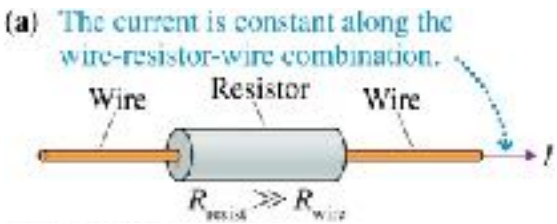

Wires typically much lower resistance

e.g. household circuit wire $\sim 0.006\ \Omega$ per metre

Ideal wire model: assume connecting wires have zero resistance

Potential drop across a resistor

As electric current flows through a circuit, voltage increases across batteries and decreases across resistors

Assuming the ideal wire model, what is the voltage at the points shown in the adjacent circuit (relative to E)?

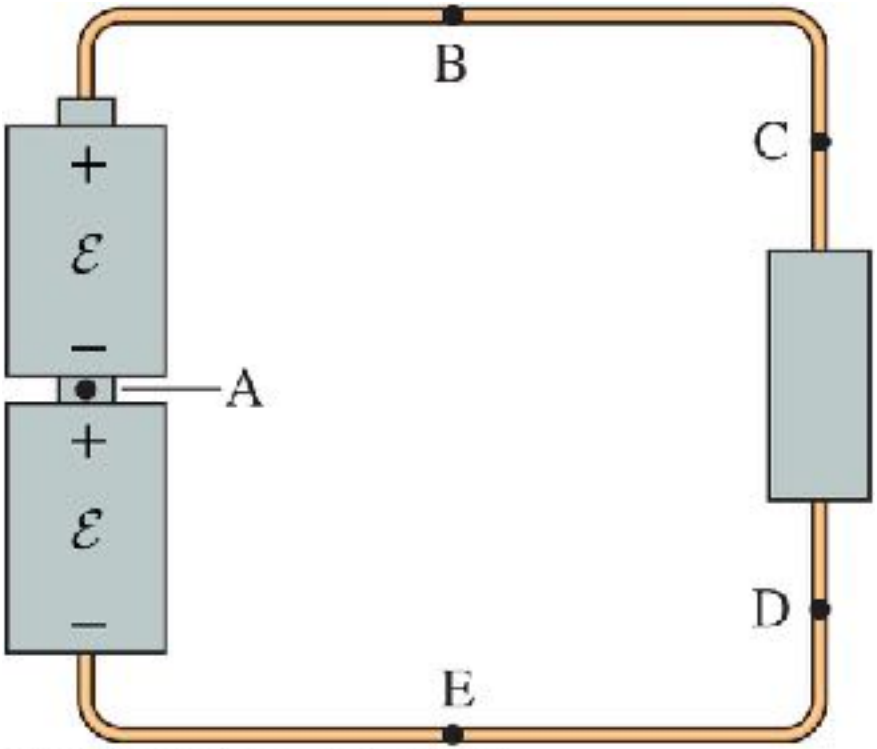

Electrical Energy and Power

- Electric current transfers energy through a circuit
- Suppose an amount of charge ΔQ flows through the battery, in time Δt
- Charge ΔQ will gain energy:

$$\Delta \mathrm{PE} = \Delta Q\, \varepsilon$$

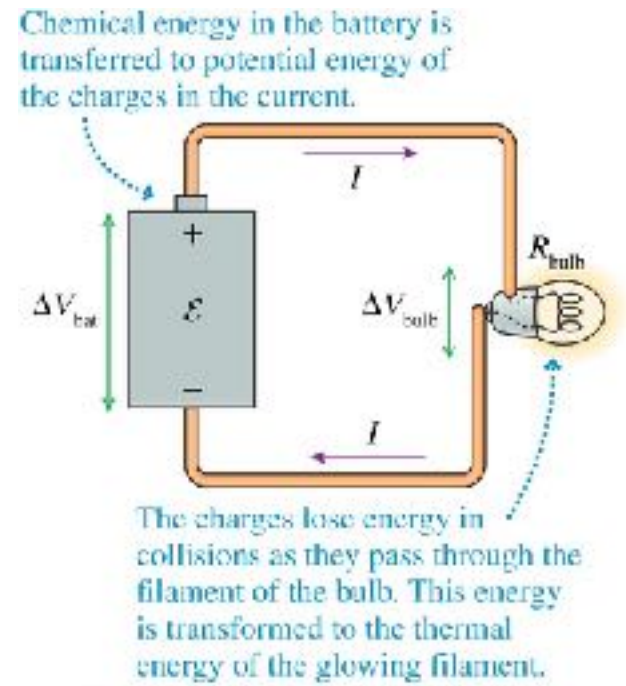

- Power = rate of change of energy:

$$P = \frac{\Delta \mathrm{PE}}{\Delta t} = \frac{\Delta Q}{\Delta t}\varepsilon$$

$$P = I\varepsilon = IV$$

- The power generated by a battery is the product of the current and the voltage difference

Electrical Energy and Power

- The energy comes from chemical reactions in the battery
- The energy is *dissipated* in the resistive circuit elements, e.g. the light bulb

$$E_{chem} \rightarrow \text{PE} \rightarrow KE \rightarrow E_{th}$$

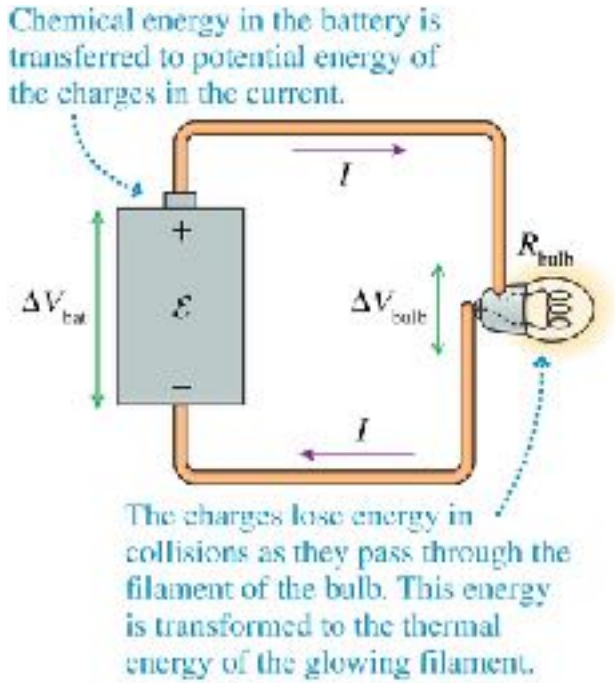

- The power used to heat the resistor is

$$P_R = \frac{\Delta \text{PE}}{\Delta t} = \frac{\Delta q}{\Delta t} V = I\,V$$

- i.e. power transformed to heat is

$$P_R = IV$$

where I is the current through the resistor, and
V is the voltage difference across the resistor

- The power generated by the battery = the power dissipated in the resistor

D Ej-2 Sausage cooker

D Ee-1 Bicycle Ergonometer

Power and Ohm's Law

The voltage drop across the resistor

- For a resistor, $V = IR$ so $P_R = IV = I(IR) = I^2R$

- Similarly $P_R = \frac{V}{R}V = \frac{(V)^2}{R}$

Example question:

A car battery has $\varepsilon = 12\text{V}$. When a car starts, it draws a current of 320 A. What power does the battery supply?

$$P_{bat} = I\varepsilon = 320\text{A} \times 12\text{V} = 3.8\text{kW}$$

Summary....

- Batteries maintain a constant voltage difference emf = $\varepsilon = \Delta V$
- Most materials resist current flow
  - Resistance R depends on geometry and material $R = \frac{V}{I}$
- Voltage, current and resistance related through $V = IR$
- We assume connecting wires in circuits have zero resistance
- Power transformed in a resistor $P_R = IV$

Circuit elements and circuit diagrams

- A circuit diagram is a schematic “cartoon” of the components and connections in an electrical circuit.
- When constructed the circuit may look different but has the same topology

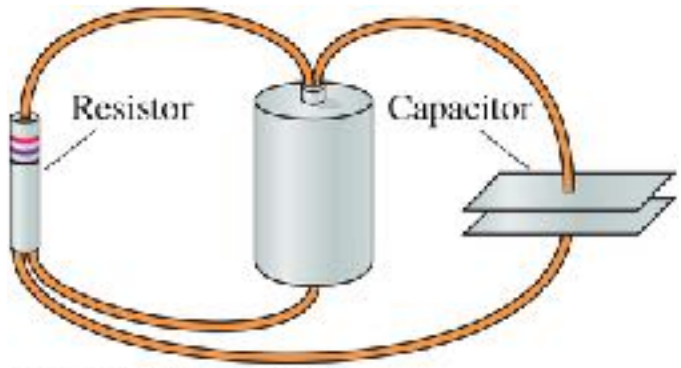

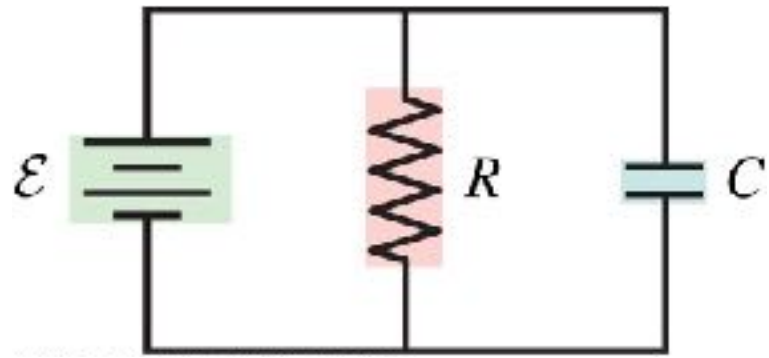

- Standard symbols are used to represent circuit elements

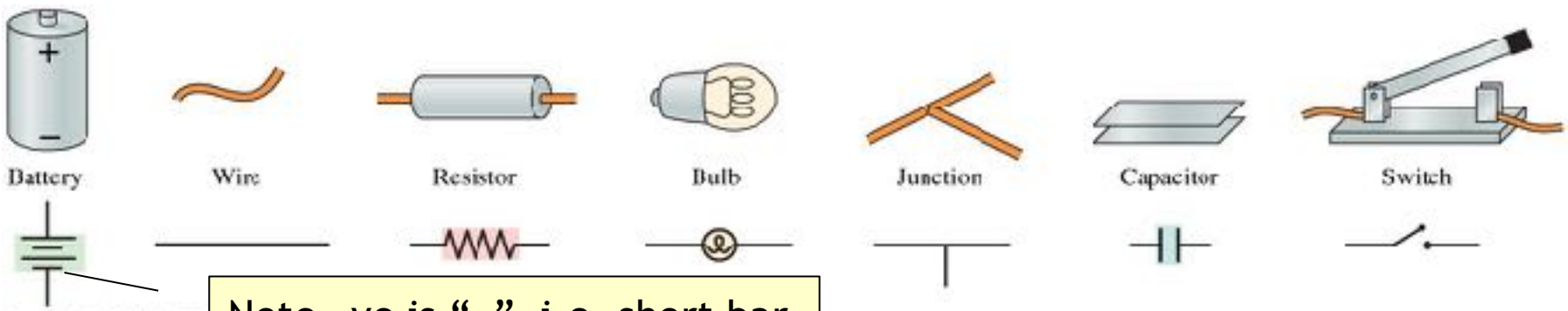

Note –ve is “–” i.e. short bar

When poll is active, respond at **pollev.com/phillipurqui081**

Text **PHILLIPURQUI081** to **+61 480 025 509** once to join

Which diagram is NOT the same circuit?

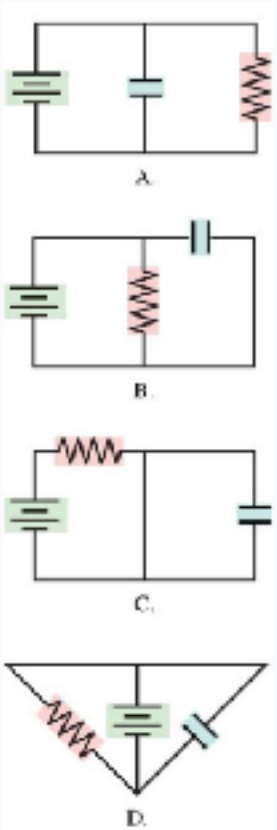

A.

B.

C.

D.

Powered by Poll Everywhere

Start the presentation to see live content. For screen share software, share the entire screen. Get help at pollev.com/app

Kirchoff's laws

Kirchoff's Laws

- Kirchoff's junction law:
  conservation of charge (current)

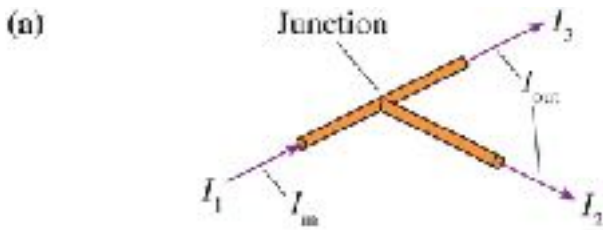

Junction law: $I_1 = I_2 + I_3$

Conservation of Energy

- If a charge goes around a loop and returns to the same place there can be no change in potential energy (like climbing up a hill and back):
  $\Delta \mathrm{PE} = 0$
- Since $V = \dfrac{\mathrm{PE}}{q}$:

  The net change in electric potential around a closed loop must be zero

$$V_{\text{loop}} = \sum_i V_i = 0$$

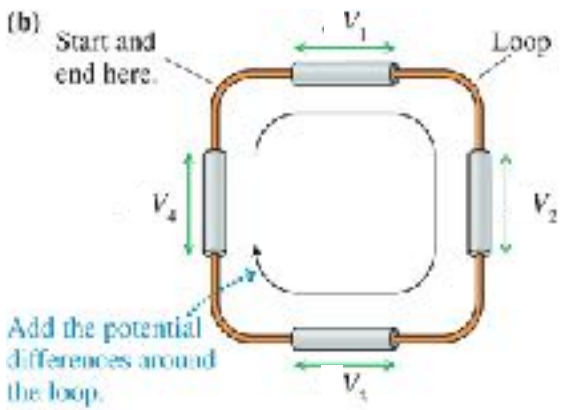

Loop law: $V_1 + V_2 + V_3 + V_4 = 0$

Kirchoff's Laws

Junction Law

$$\sum I_{\text{in}} = \sum I_{\text{out}}$$

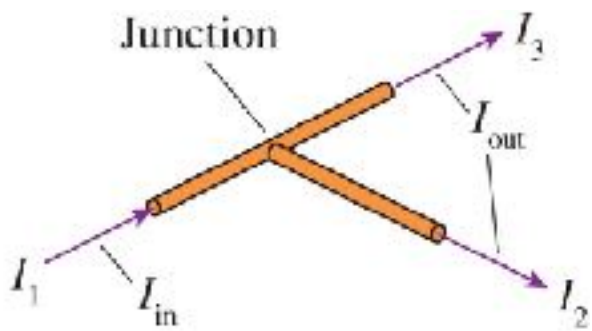

$$I_1 = I_2 + I_3$$

Loop Law

$$V_{\text{loop}} = \sum_i V_i = 0$$

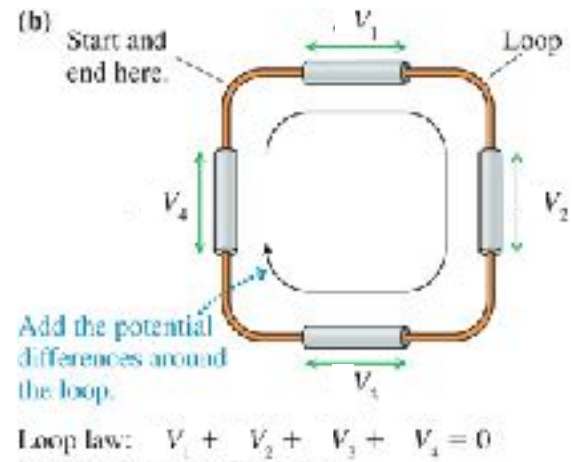

The combination of these two laws allows us to determine the behaviour of complex circuits

When poll is active, respond at **pollev.com/phillipurqui081**

Text **PHILLIPURQUI081** to **+61 480 025 509** once to join

Current in Junction

Four wires have currents as shown. What is the direction and magnitude of the current in the 5th wire?

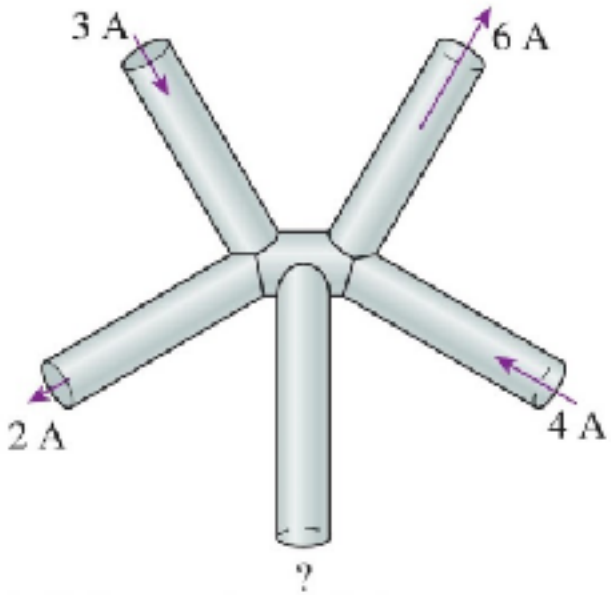

A. +1 A (into junction)

B. -1 A (out of junction)

C. Zero

D. +2 A

E. -2 A

Powered by Poll Everywhere

Start the presentation to see live content. For screen share software, share the entire screen. Get help at pollev.com/app

When poll is active, respond at **pollev.com/phillipurqui081**

Text **PHILLIPURQUI081** to **+61 480 025 509** once to join

Three Bulbs

The discharge of a capacitor lights three bulbs.
Comparing currents in bulbs 1 and 2, we can say that:

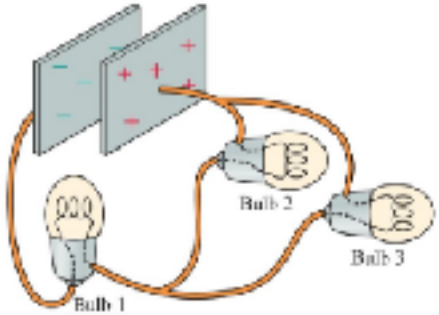

A. The current in bulb 1 is greater than the current in bulb 2

B. The current in bulb 1 is less than the current in bulb 2

C. The current in bulb 1 is equal to the current in bulb 2

Powered by Poll Everywhere

Start the presentation to see live content. For screen share software, share the entire screen. Get help at pollev.com/app

When poll is active, respond at **pollev.com/phillipurqui081**

Text **PHILLIPURQUI081** to **+61 480 025 509** once to join

Bulb Brightness

The circuit below consists of two identical light bulbs burning with equal brightness and a single 12 V battery. When the switch is closed, the brightness of bulb A

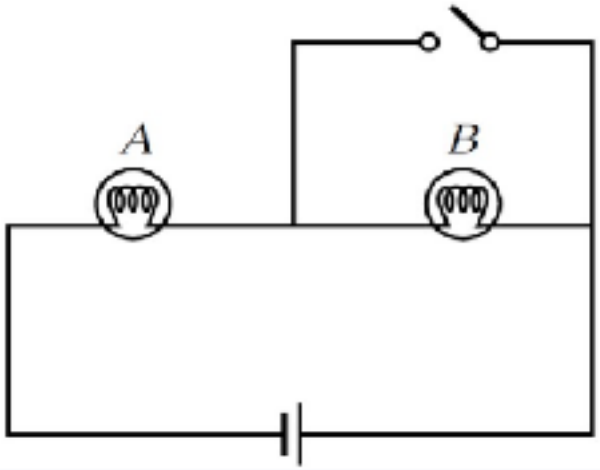

1. increases
2. remains unchanges
3. decreases

Powered by Poll Everywhere

Start the presentation to see live content. For screen share software, share the entire screen. Get help at pollev.com/app

Resistors in series

- Resistors *in series* have same current through each

$$V_{\text{loop}} = \sum_i V_i = \varepsilon + V_1 + V_2 = 0$$

$$\varepsilon - IR_1 - IR_2 = 0$$
$$\varepsilon = I\left(R_1 + R_2\right)$$
$$I = \frac{\varepsilon}{R_1 + R_2}$$

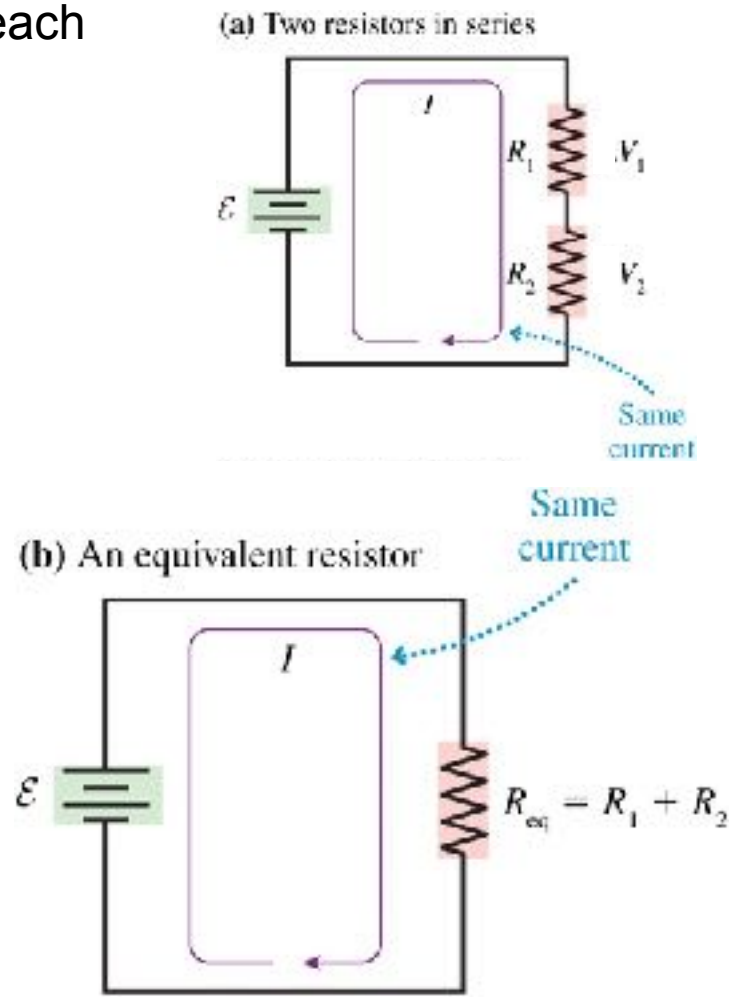

So the total current is as if $I = \dfrac{\varepsilon}{R_{\text{eq}}}$ where R_{eq} is an equivalent single resistor of value $R_1 + R_2$

Resistors in series:

$$R_{\text{eq}} = R_1 + R_2 + R_3 + \ldots$$

Series Resistors

- Batteries maintain a constant voltage difference
- The current in a circuit is determined by that voltage difference and the resistance in the circuit
- What is the electric current in each of the following circuits?

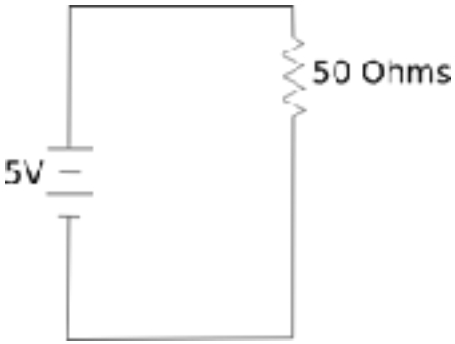

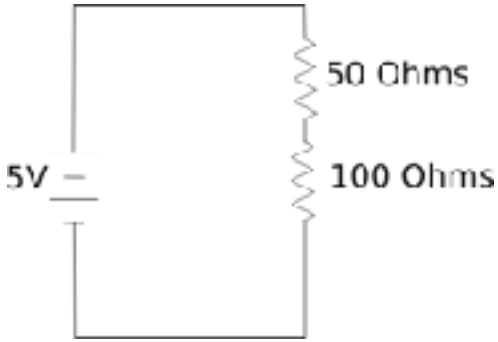

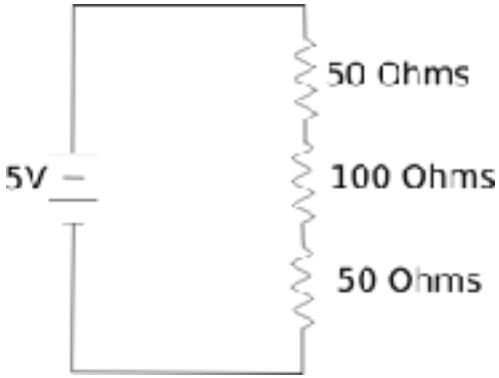

$$I = \frac{\varepsilon}{R} = \frac{5}{50} = 0.1 \text{ A}$$

$$I = \frac{\varepsilon}{R_{\text{eq}}} = \frac{5}{150} = 33 \text{ mA}$$

$$I = \frac{\varepsilon}{R_{\text{eq}}} = \frac{5}{200} = 25 \text{ mA}$$

- The *currents* are different but the battery voltage (emf) is the same

When poll is active, respond at **pollev.com/phillipurqui081**

Text **PHILLIPURQUI081** to **+61 480 025 509** once to join

Resistors in series

Consider two identical resistors wired in series.
If there is an electric current through the combination,
the current in the second resistor is

1. equal to
2. half
3. smaller than, but not necessarily half

the current through the first resistor?

1. equal to

2. half

3. smaller than, but not necessarily half

Powered by Poll Everywhere

Start the presentation to see live content. For screen share software, share the entire screen. Get help at pollev.com/app

Resistors in parallel

- Resistors *in parallel* have same voltage difference across each
- Kirchoff junction law:

$$I_{\text{bat}} = I_1 + I_2$$

$$I_{\text{bat}} = \frac{\varepsilon}{R_1} + \frac{\varepsilon}{R_2} = \varepsilon\left(\frac{1}{R_1} + \frac{1}{R_2}\right)$$

For resistors in parallel, use $\varepsilon = I_{\text{bat}} R_{\text{eq}}$:

$$R_{\text{eq}} = \left(\frac{1}{R_1} + \frac{1}{R_2}\right)^{-1}$$

$$\frac{1}{R_{\text{eq}}} = \left(\frac{1}{R_1} + \frac{1}{R_2}\right)$$

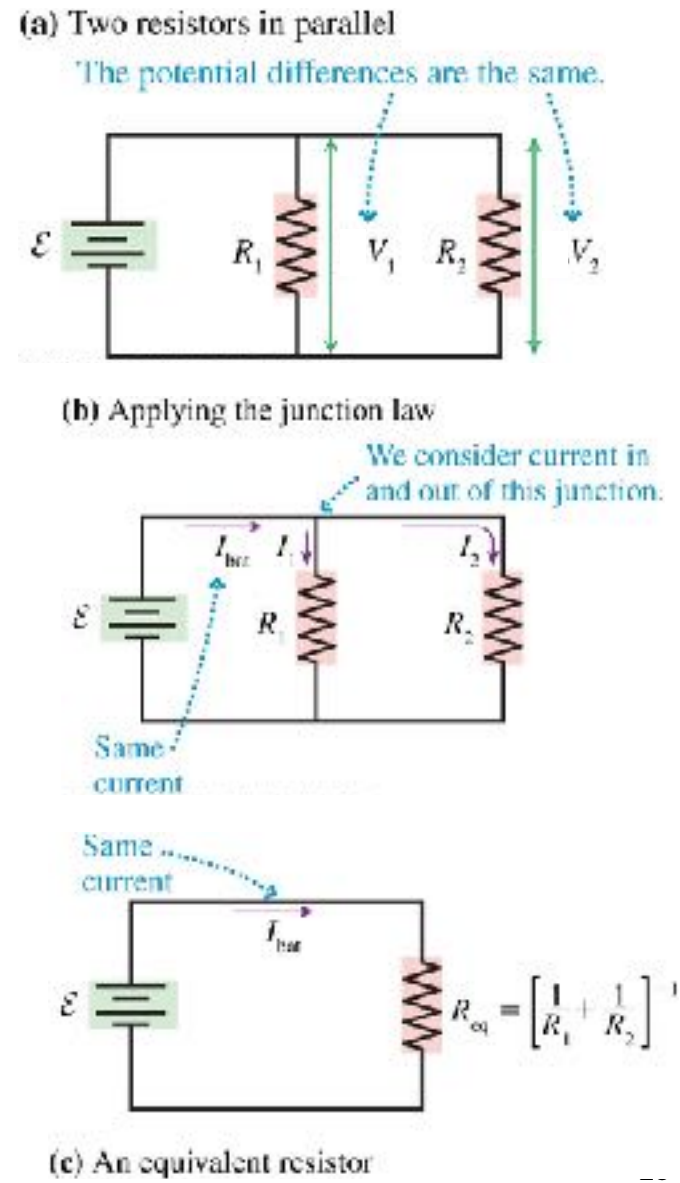

Example: Current in a parallel resistor circuit

- Resistors in parallel: $$\frac{1}{R_{\text{eq}}} = \left(\frac{1}{R_1} + \frac{1}{R_2} + \frac{1}{R_3} + \ldots\right)$$

- Three resistors are connected in parallel as shown.
  What is the battery current?

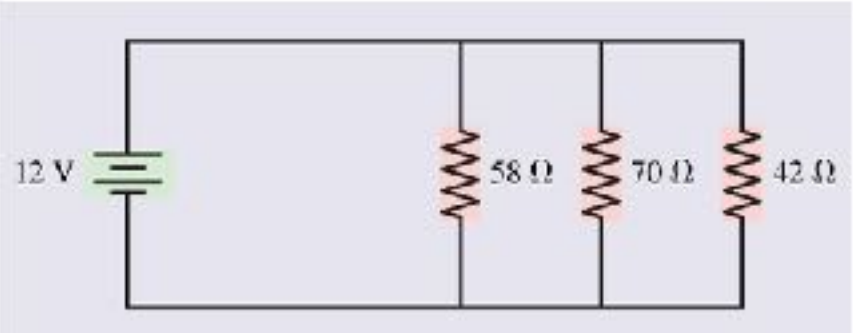

- Equivalent circuit

$$R_{\text{eq}} = \left(\frac{1}{58} + \frac{1}{70} + \frac{1}{42}\right)^{-1} = 18\Omega$$

$$I = \frac{\varepsilon}{R_{\text{eq}}} = \frac{12}{18} = 0.667 \text{ A}$$

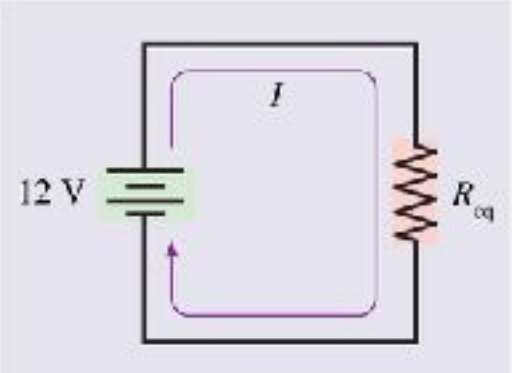

Measuring voltage, current, ...

- *Multi*meter
- Voltage, current, resistance, …
- Learn how to measure voltage, current in the labs

Measuring voltage, current

Measure current with ammeter in series (imagining measuring water current)

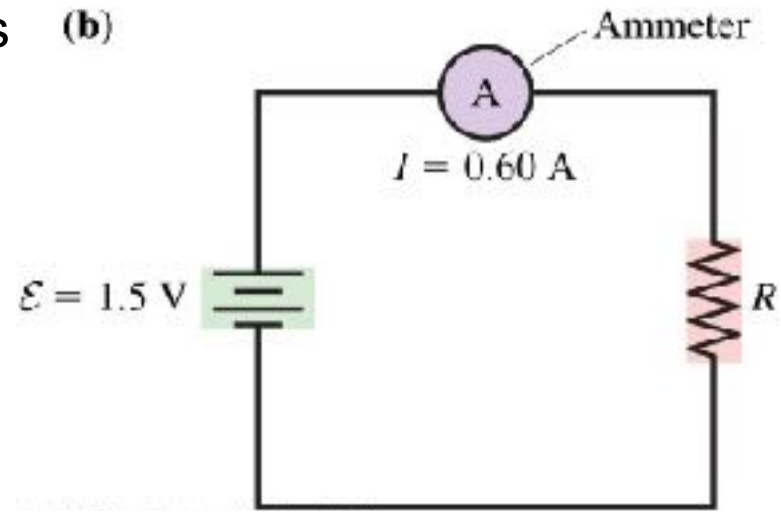

Measure voltage with voltmeter in parallel (imagine measuring height)

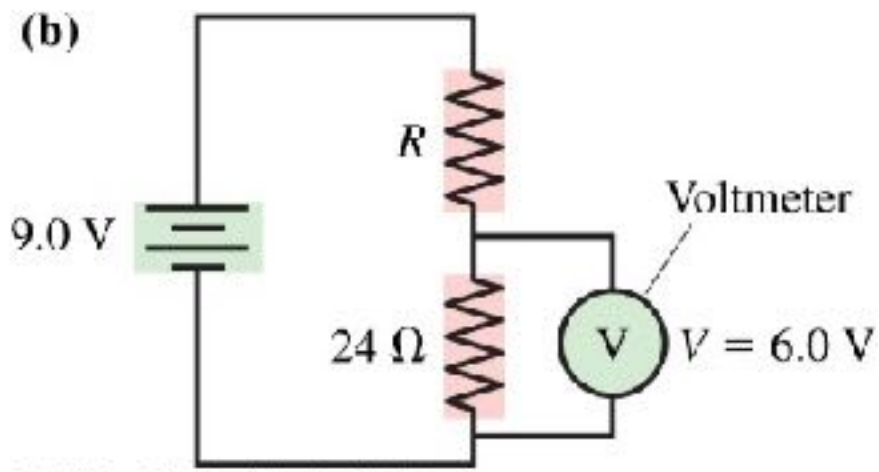

When poll is active, respond at **pollev.com/phillipurqui081**

Text **PHILLIPURQUI081** to **+61 480 025 509** once to join

Four Light bulbs

If the four light bulbs in the figure are identical, which circuit produces more light?

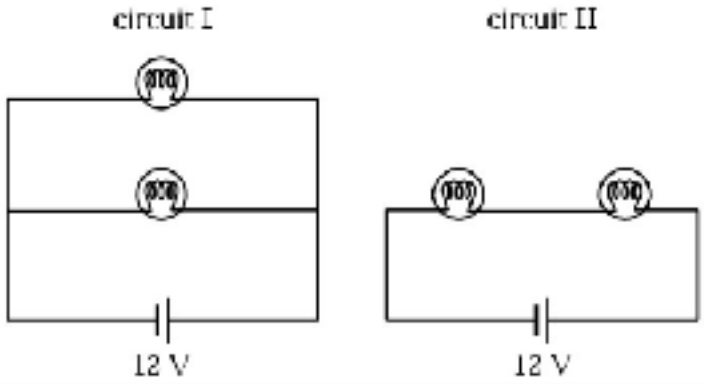

1. I

2. The two emit the same ampount of light

3. II

Powered by Poll Everywhere

Start the presentation to see live content. For screen share software, share the entire screen. Get help at pollev.com/app

Summary

- Power generated by a battery $P = I\varepsilon = IV$
- Power turned into heat $P_R = IV$
- Circuit diagram: *schematic* of components and connections

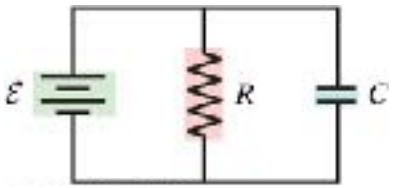

- Kirchoff's Laws:

Junction Law
Conservation of charge

$$\sum I_{\text{in}} = \sum I_{\text{out}}$$

Loop Law
Conservation of energy

$$V_{\text{loop}} = \sum_i V_i = 0$$

Resistors in series: $R_{\text{eq}} = R_1 + R_2 + R_3 + \ldots$

Resistors in parallel:

$$\frac{1}{R_{\text{eq}}} = \left(\frac{1}{R_1} + \frac{1}{R_2} + \frac{1}{R_3} + \ldots\right)$$

Measure current with ammeter in series

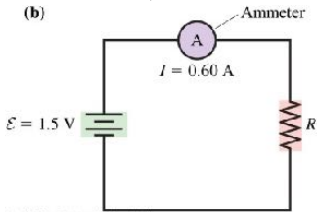
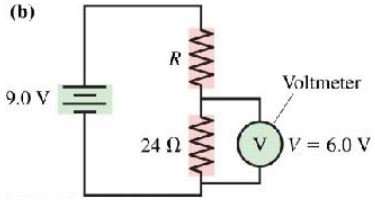
Measure voltage with voltmeter in parallel