# PHYC10009 Physics Foundations

## Electric current, Magnetism
## Week 8 Lecture 3

Professor Phillip Urquijo
School of Physics
University of Melbourne

# Today

- Circuits sample exam questions

- Magnetic force
- Magnetic fields from electric currents
- Solenoids

# Review

- Power generated by a battery $P = I\varepsilon = IV$
- Power turned into heat $P_R = IV$
- Circuit diagram: *schematic* of components and connections

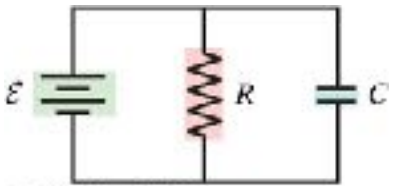


- Kirchoff's Laws:

Junction Law
Conservation of charge

$$\sum I_{\text{in}} = \sum I_{\text{out}}$$

Loop Law
Conservation of energy

$$V_{\text{loop}} = \sum_i V_i = 0$$

Resistors in series: $R_{\text{eq}} = R_1 + R_2 + R_3 + \ldots$

Resistors in parallel:

$$\frac{1}{R_{\text{eq}}} = \left(\frac{1}{R_1} + \frac{1}{R_2} + \frac{1}{R_3} + \ldots\right)$$

Measure current with ammeter in series

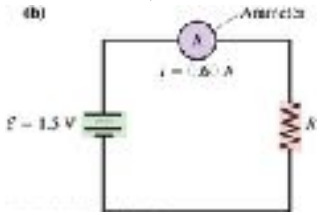


Measure voltage with voltmeter in parallel

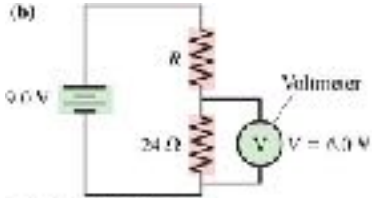

# Circuits - examples

# Circuits example: Exam 2008

**Question 5** **[6 + 9 = 15 marks]**

(a) An electric oil-filled heater draws 4.0A current when plugged into a 240 V supply.

(i) What is its resistance?

(ii) How much charge passes through it in 5 minutes?

(iii) What power does it dissipate?

(b) Consider the circuit shown on the right. $V = 5.0$ V, $R_1 = 10\ \Omega$, $R_2 = 20\ \Omega$ and $R_3 = 30\ \Omega$.

(i) What resistance is equivalent to $R_1$ and $R_2$?

(ii) What current flows through $R_3$?

(iii) What is the potential difference across $R_3$?

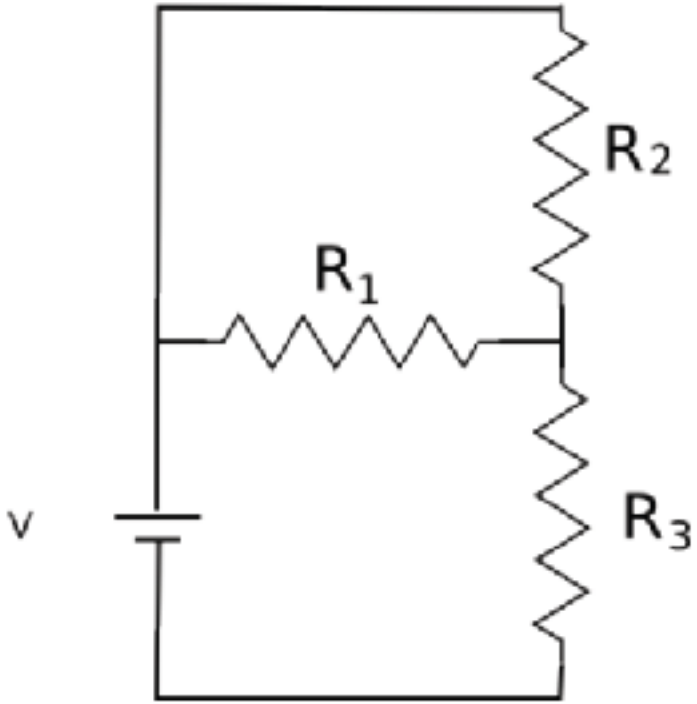

# Circuits example: Exam 2008

**Question 5** **[6 + 9 = 15 marks]**

(a) An electric oil-filled heater draws 4.0A current when plugged into a 240 V supply.

(i) What is its resistance?

(ii) How much charge passes through it in 5 minutes?

(iii) What power does it dissipate?

(b) Consider the circuit shown on the right. $V = 5.0$ V, $R_1 = 10\ \Omega$, $R_2 = 20\ \Omega$ and $R_3 = 30\ \Omega$.

(i) What resistance is equivalent to $R_1$ and $R_2$?

(ii) What current flows through $R_3$?

(iii) What is the potential difference across $R_3$?

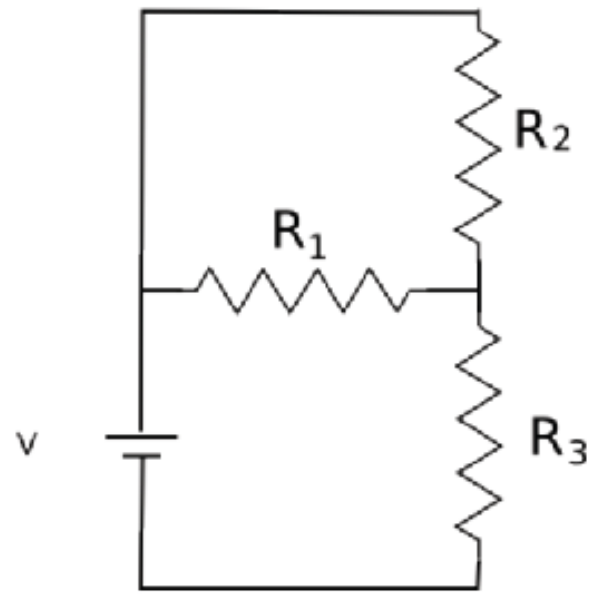


(a) (i) $V = IR \Rightarrow R = \dfrac{V}{I} = \dfrac{240}{4.0} = 60\ \Omega$

(ii) $Q = I \times \Delta t = 4 \times 60 \times 5 = 1200C$

(ii) $P = V \times I = 240 \times 4.0 = 960$ watts

(b) (i) $\dfrac{1}{R} = \dfrac{1}{R_1} + \dfrac{1}{R_2} = \dfrac{1}{10} + \dfrac{1}{20} = \dfrac{3}{20} \Rightarrow R = 6.67\ \Omega$

(ii) Total resistance = $6.67 + 30 = 36.67\ \Omega$ , $I = \dfrac{V}{R} = \dfrac{5.0}{36.67} = 0.136\ A$

(iii) $V = IR = 0.136 \times 30 = 4.09\ V$

# Circuits example: Exam 2011

**Question 5** **[2 + 2 + 3 + 3 + 3 + 3 = 16 marks]**

A 100 Ohm resistor is connected to a 1.5 V battery as shown in the diagram below.

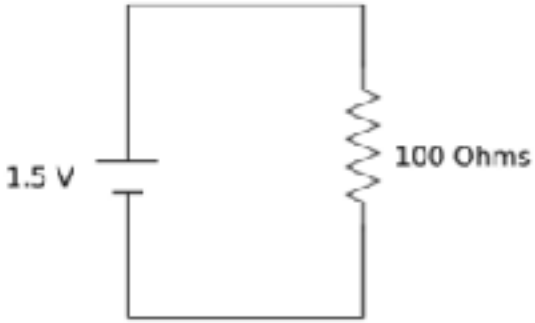


(a) What electric current flows in the circuit?

(b) A low quality ammeter is connected in series with the resistor as shown blow. The internal resistance of the ammeter is 10 Ohms. What current does the ammeter read?

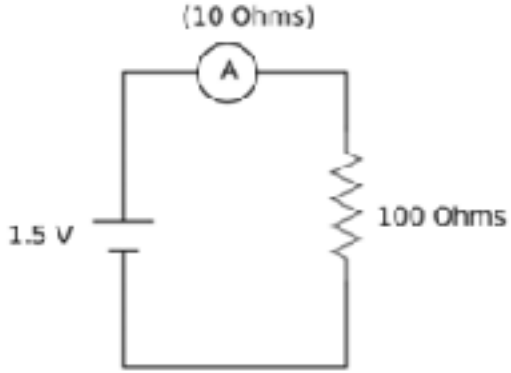

# Circuits example: Exam 2011

**Question 5** **[2 + 2 + 3 + 3 + 3 + 3 = 16 marks]**

A 100 Ohm resistor is connected to a 1.5 V battery as shown in the diagram below.

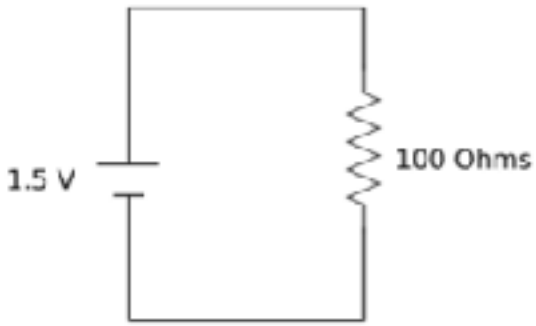


(a) $V = IR \Rightarrow I = \dfrac{1.5}{100} = 0.15\ A$

(a) What electric current flows in the circuit?

(b) A low quality ammeter is connected in series with the resistor as shown blow. The internal resistance of the ammeter is 10 Ohms. What current does the ammeter read?

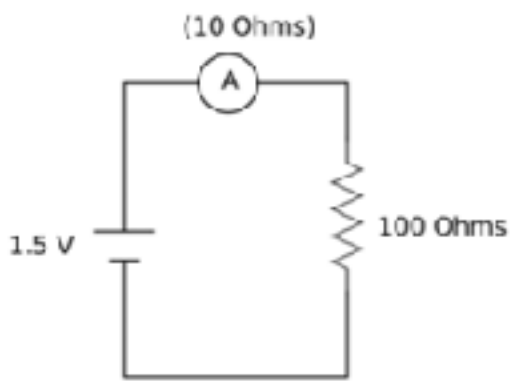


(b) $V = IR \Rightarrow I = \dfrac{1.5}{100 + 10} = 0.136\ A$

# Circuits example: Exam 2011

(c) A low quality voltmeter with internal resistance of 1000 Ohms is connected across the resistor as shown in the diagram below. What is the effective resistance of the 100 Ohm resistor in parallel with the voltmeter?

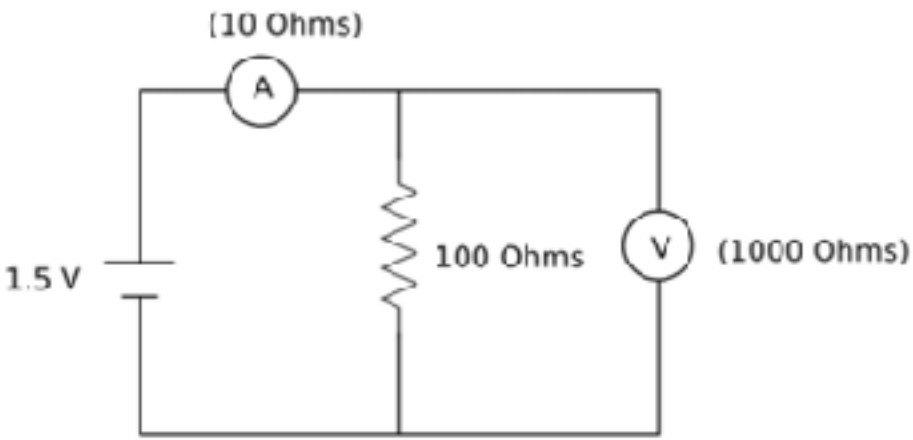


(d) What current does the ammeter read with this arrangement?

(e) What potential difference does the voltmeter display?

(f) What current flows through the 100 Ohm resistor?

# Circuits example: Exam 2011

(c) A low quality voltmeter with internal resistance of 1000 Ohms is connected across the resistor as shown in the diagram below. What is the effective resistance of the 100 Ohm resistor in parallel with the voltmeter?

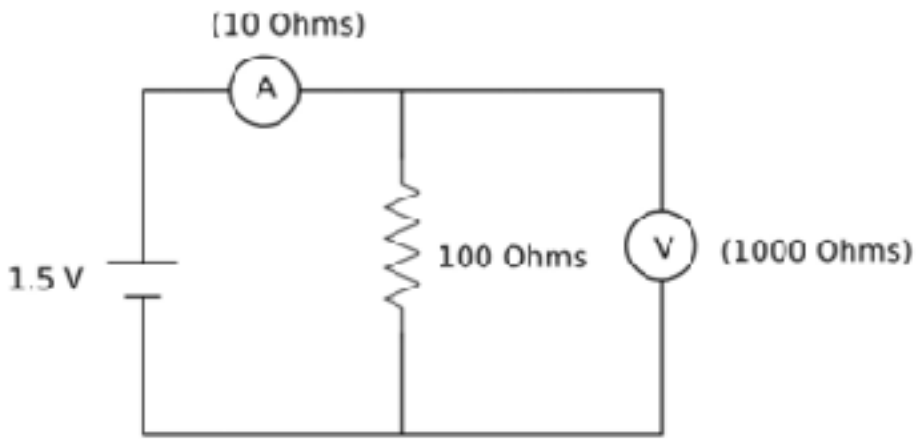


(c)

$$\frac{1}{R} = \frac{1}{1000} + \frac{1}{100} = \frac{1+10}{1000} \Rightarrow R = 90.9\ \Omega$$

(d) $R = 10 + 90.9 = 100.9\ \Omega$

$$I = \frac{1.5}{100.9} = 0.0149\ A$$

(e) $V = IR = 0.0149 \times 90.9 = 1.34\ V$

(f) $I = \frac{V}{R} = \frac{1.34}{100} = 0.0134\ A$

(d) What current does the ammeter read with this arrangement?

(e) What potential difference does the voltmeter display?

(f) What current flows through the 100 Ohm resistor?

# GAMSAT example

**27** In the following three circuits, all of the cells and globes are identical, and the internal resistances of the cells are negligible.

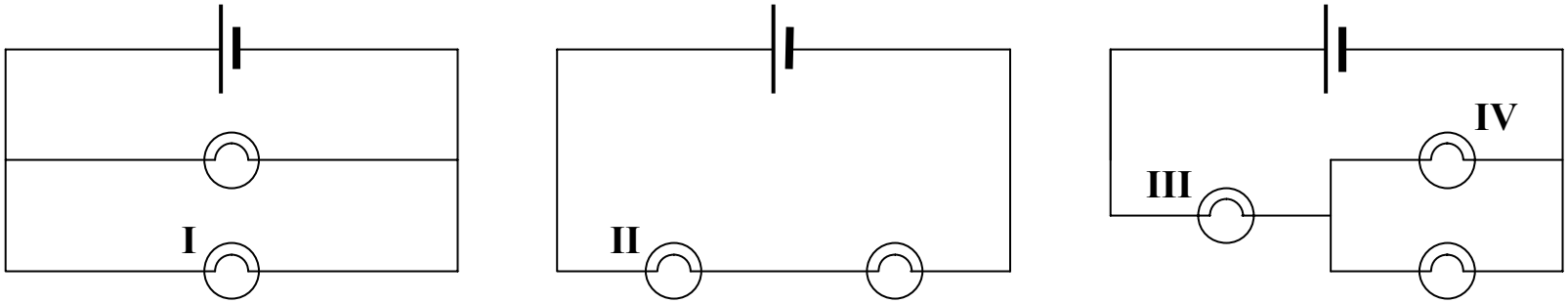


**Figure 2**

Which one of the four globes I, II, III or IV would be the brightest?

**A** I
**B** II
**C** III
**D** IV

# GAMSAT example

**27** In the following three circuits, all of the cells and globes are identical, and the internal resistances of the cells are negligible.

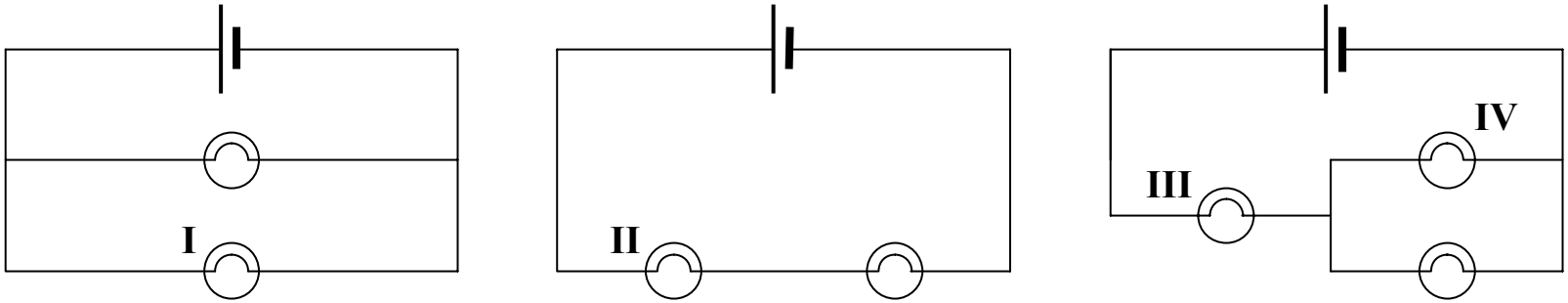


**Figure 2**

Which one of the four globes I, II, III or IV would be the brightest?

**A** I
**B** II
**C** III
**D** IV

Of the four options only "I" has the full potential of the battery across the lamp. So "I" will have the highest current and power. Answer "A"

# Magnetism

Well, tell me, Randy. Has someone eaten all the refrigerator magnets again?

# Chapter 20: Magnetism

- Magnetic force
- Magnetic fields from electric currents
- Solenoids
- Magnetic forces on moving charges
- Mass spectrometer

# Magnetism

- Magnetic resonance imaging is the most powerful non-invasive diagnostic imaging tool available
- The next few lectures provide the basis for understanding how it works

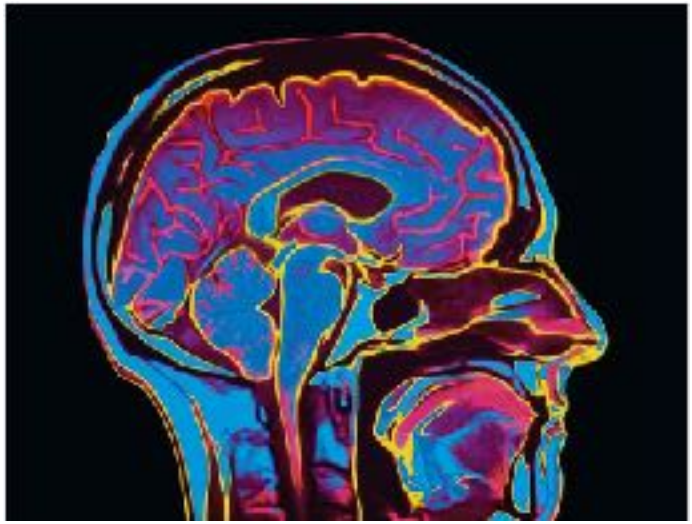

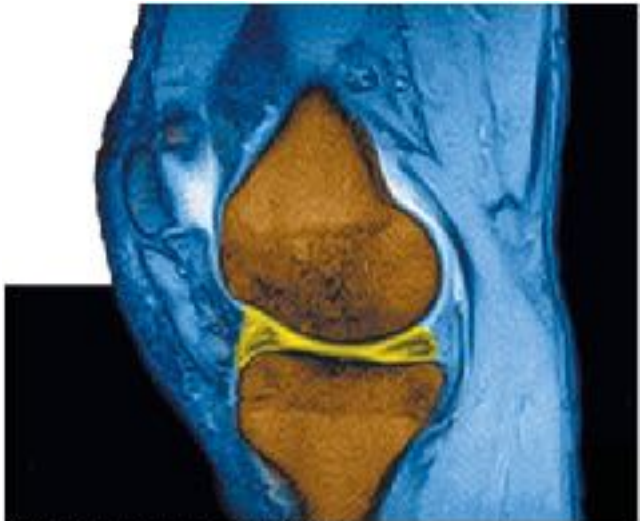

**Questions 26 – 28** GAMSAT

Magnetic resonance imaging (MRI) is a noninvasive technique for visualising the living human body. It depends on a phenomenon called *nuclear magnetic resonance* (NMR) which occurs when certain atoms are placed in very strong magnetic fields. All nuclei that have odd mass numbers exhibit NMR as do all nuclei that have even mass numbers but odd atomic numbers. Nuclei having both even mass numbers and even atomic numbers do not exhibit NMR.

# 20.1 What is Magnetism?

- Like poles repel
- Unlike poles attract

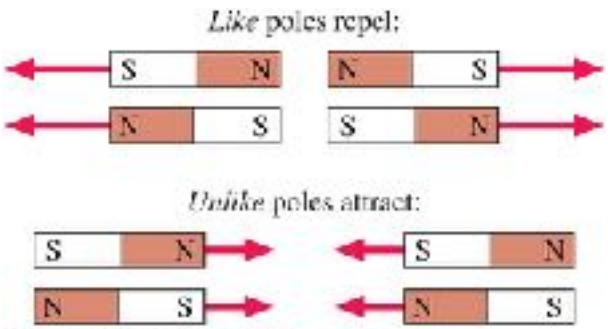


- There are no monopoles: cut a bar magnet in half → two weaker magnets

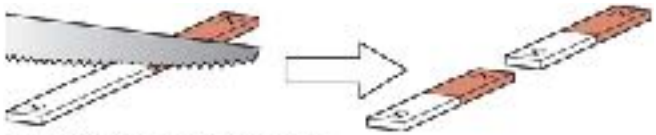

- Magnets attract to some materials

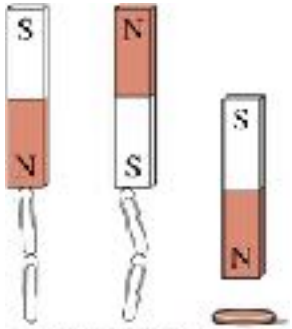


- There are strong links between electricity and magnetism:
  - an electric current induces a magnetic field
  - a changing magnetic field induces an electric current

# Test magnet: compass needle

- The needle of a compass is a tiny bar magnet

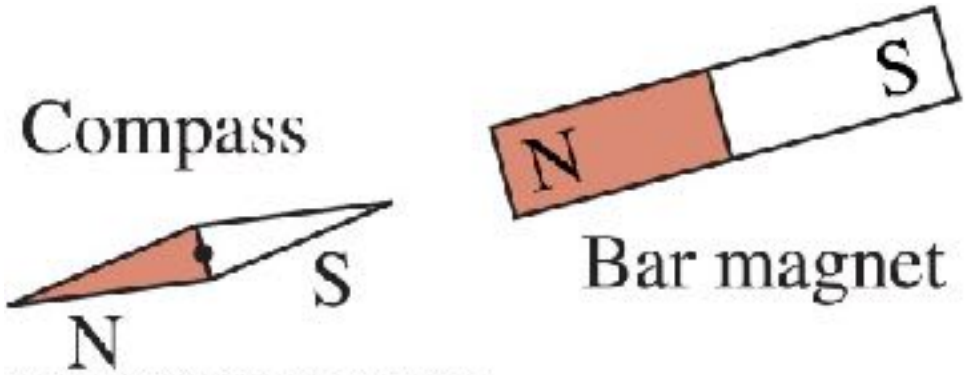


- Use compass to detect magnetic fields
- Example: field of planet Earth
  (Earth is a big magnet)

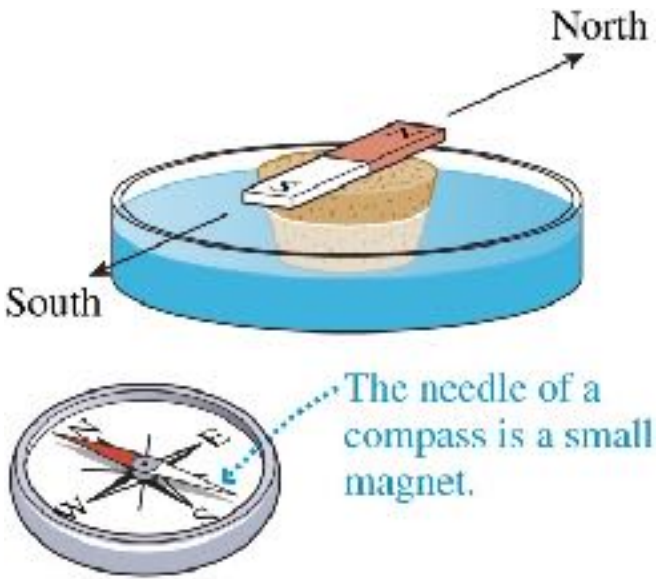

# Earth magnetic poles

- The South magnetic pole of Earth is located in northern Canada
- The North magnetic pole of Earth is located off the coast of Antarctica

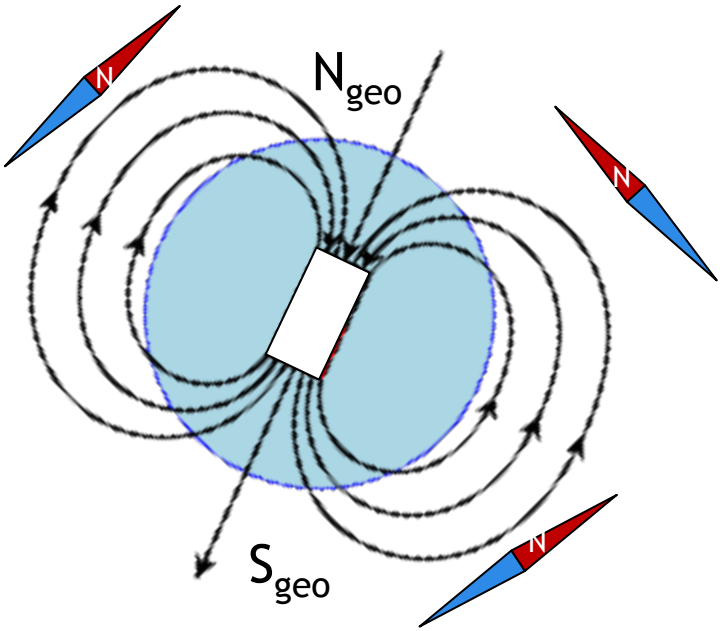


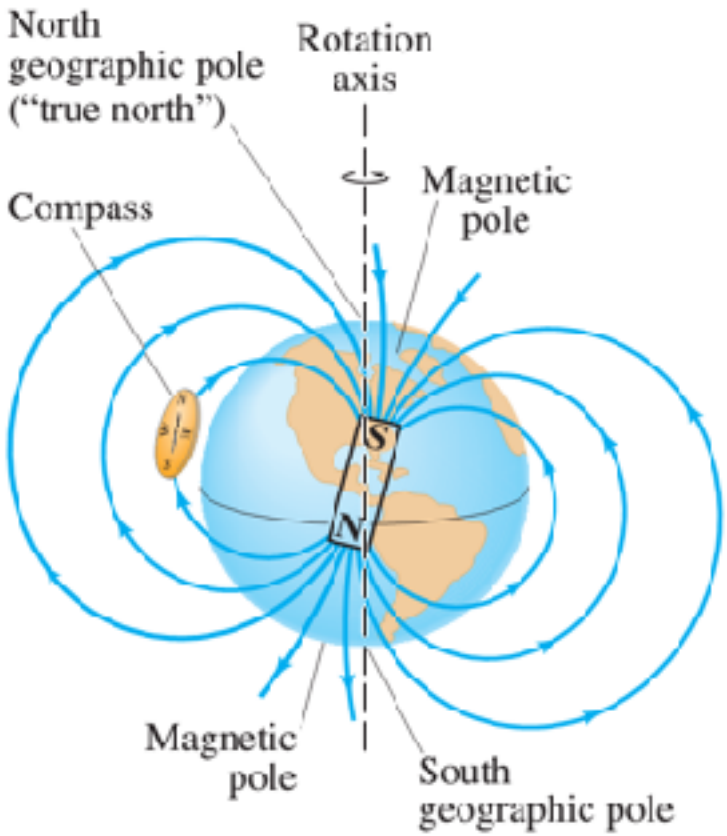


**FIGURE 20–5** The Earth acts like a huge magnet. But its magnetic poles are not at the geographic poles (on the Earth's rotation axis).

**D** Bar magnet and Compass needle

# The Earth's Magnetic Field

- The magnetic field of the Earth acts as a radiation shield and deflects the solar wind away from the Earth
- The solar wind (GeV protons) is very hazardous to life!

Sun

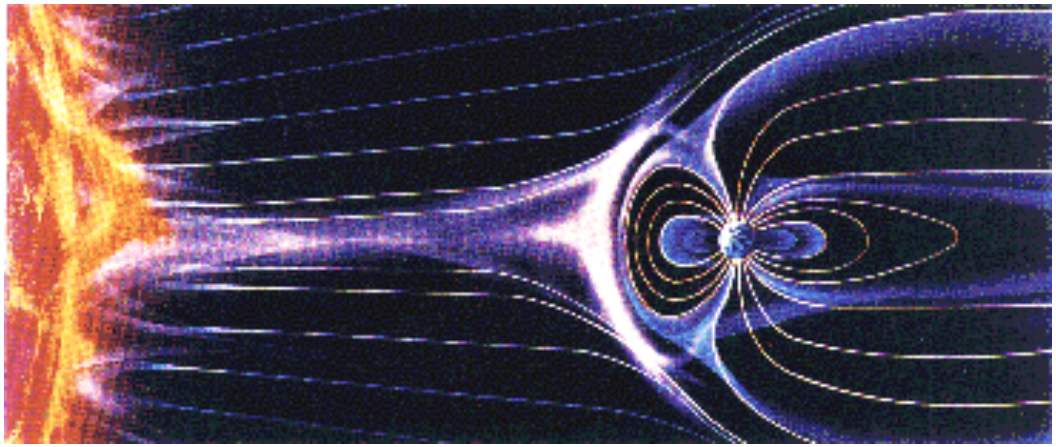

Earth

- The Earth's magnetic field deflects the dangerous particles

# The Earth's Magnetic Field and the Aurora

- The Earth's magnetic field is like a magnetic bottle wrapped around the poles
- Ions created by the solar wind from the outer atmosphere get trapped
- They leak from the ends into the atmosphere to create the Aurora

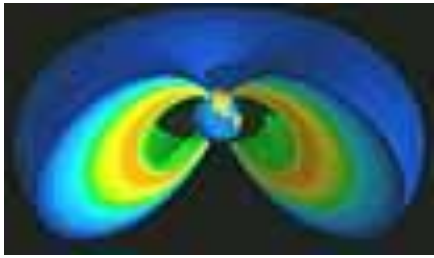

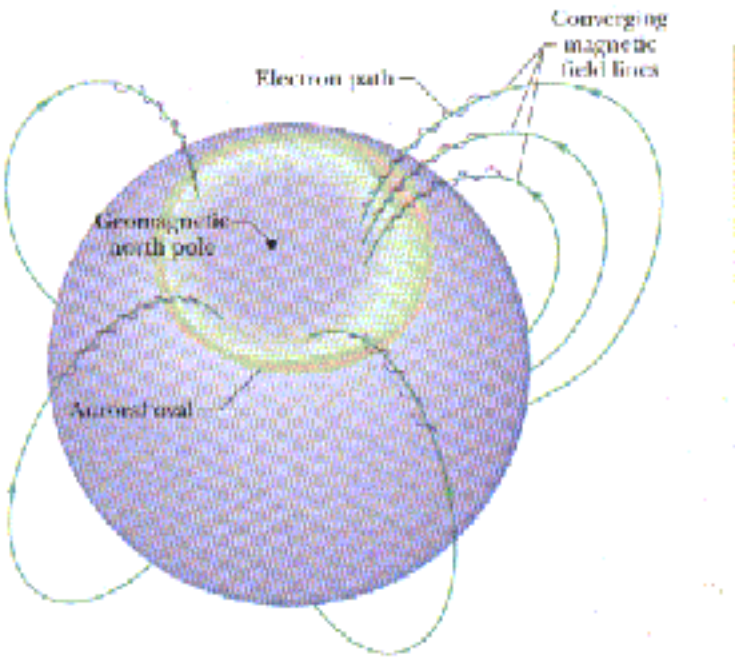


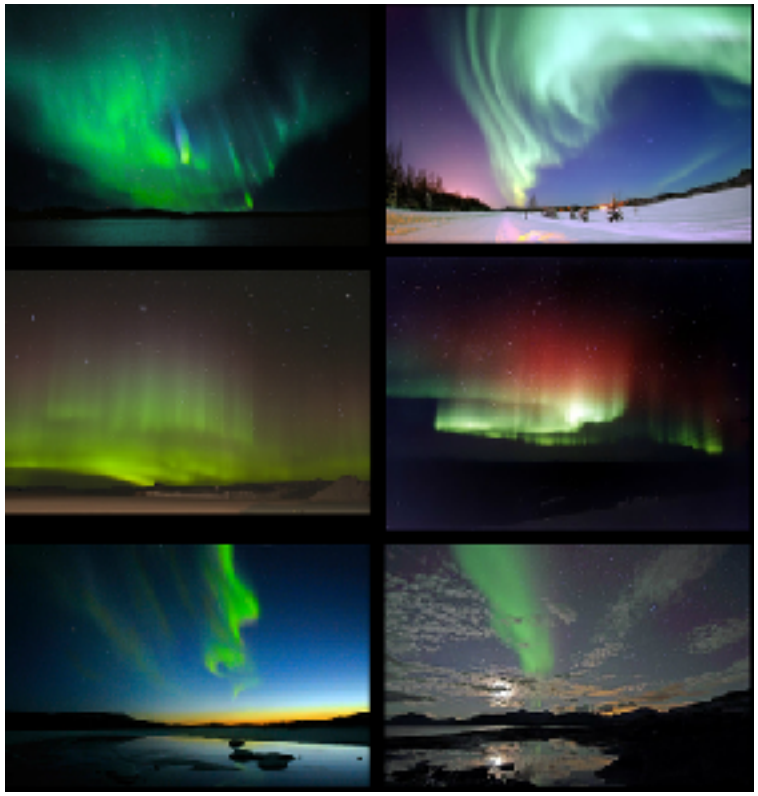

# Aurora Australis (from NASA IMAGE satellite)

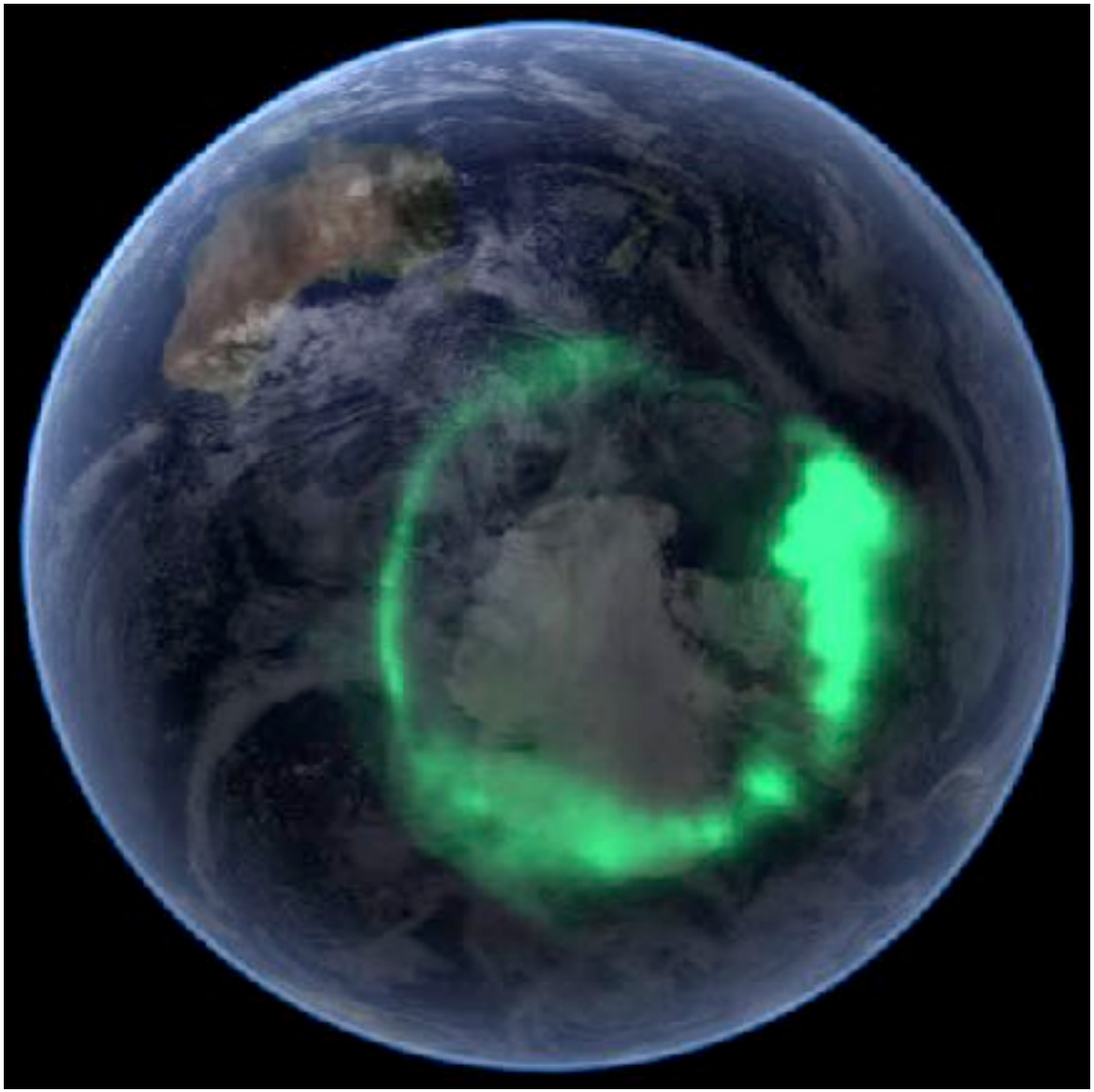

# Magnetic Field

- We can measure magnetic forces and therefore define a *magnetic field*

■ The *direction* of the magnetic field is the direction that the north pole of a compass needle points.

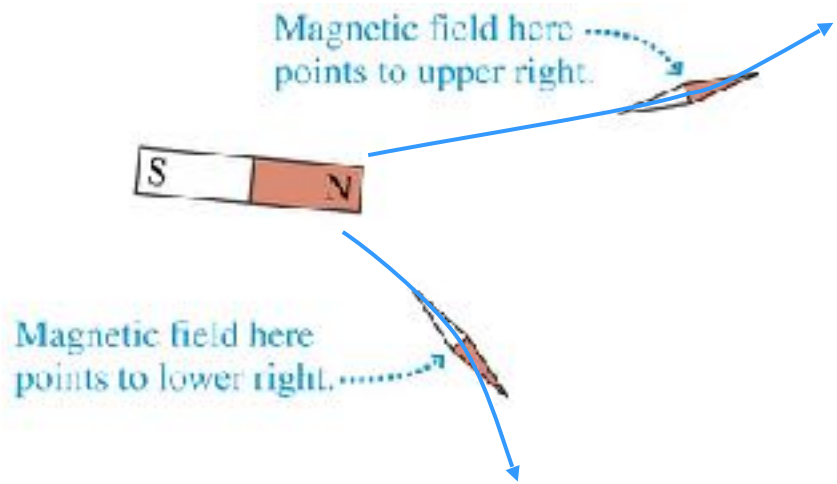


■ The *strength* of the magnetic field is proportional to the torque felt by the compass needle if it is turned slightly away from the field direction.

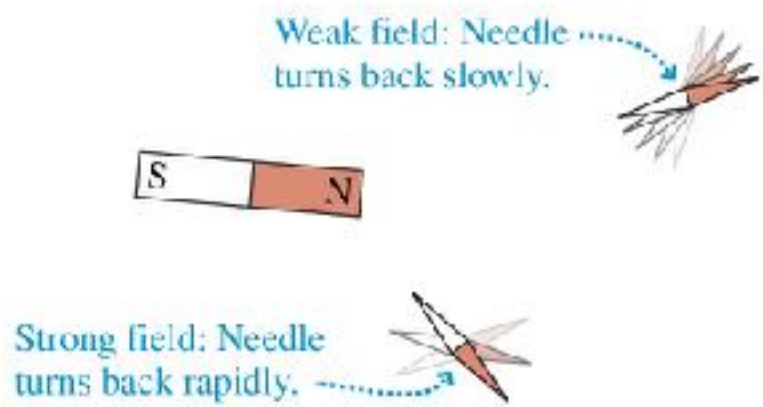

# Magnetic field vectors and lines

- Field vectors around a magnet

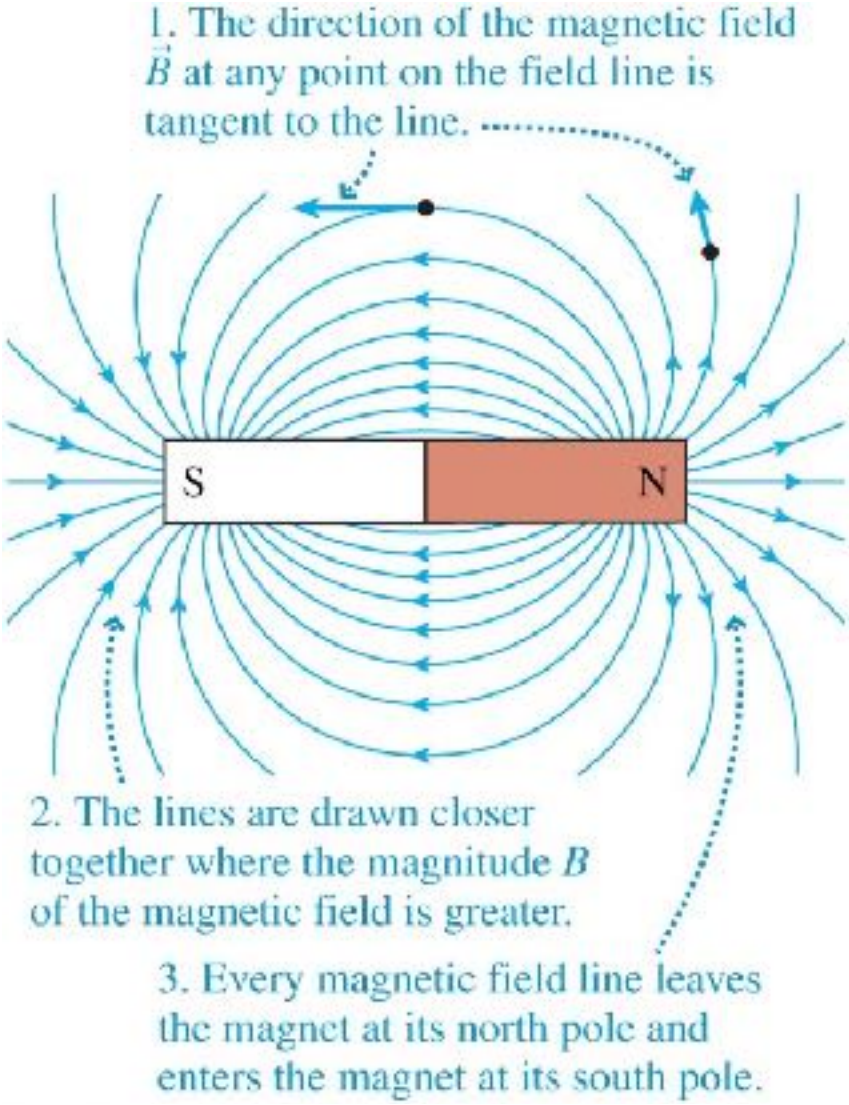


D Bar magnet and Compass needle on doc cam

# Magnetic field lines

Bar magnet
(magnetic dipole)

Head to tail
(attractive)

Head to head
(repulsive)

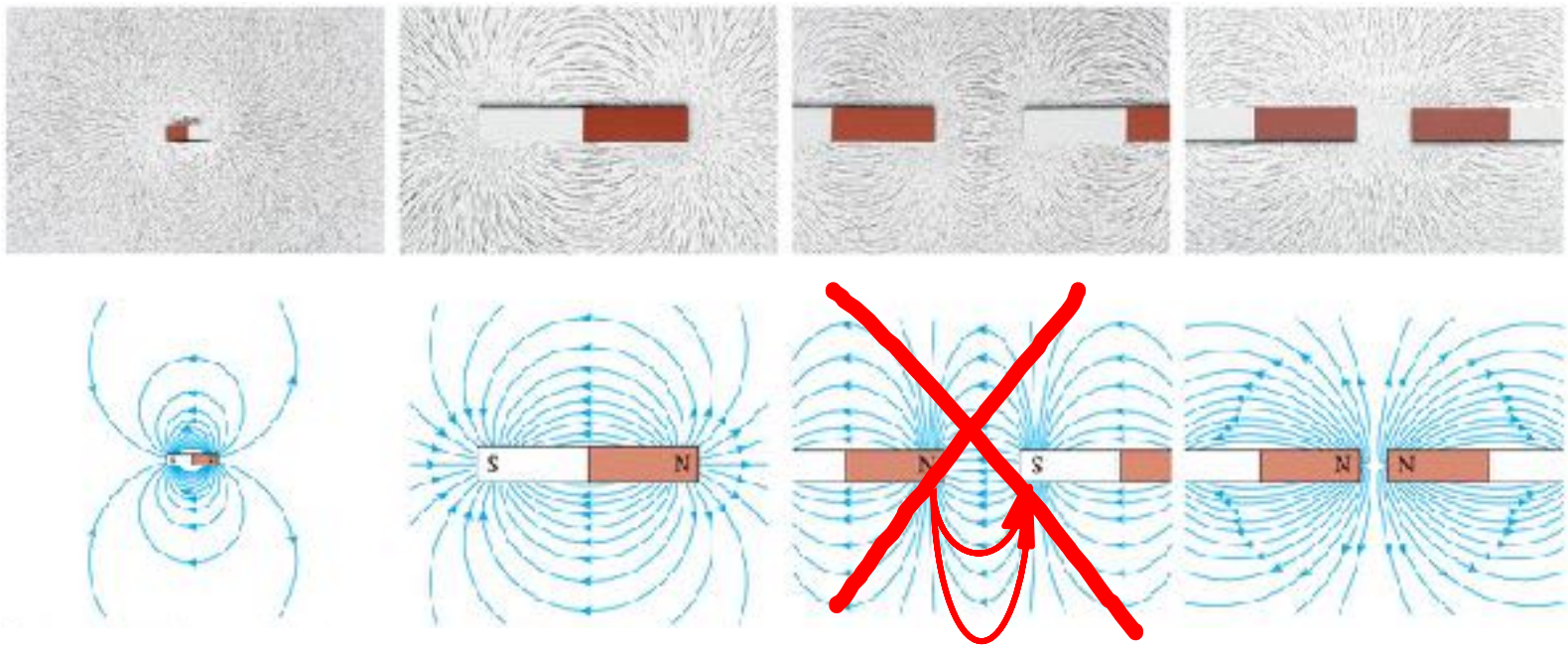

# Uniform magnetic field

**FIGURE 20–7** Magnetic field between two wide poles of a magnet is nearly uniform, except near the edges.

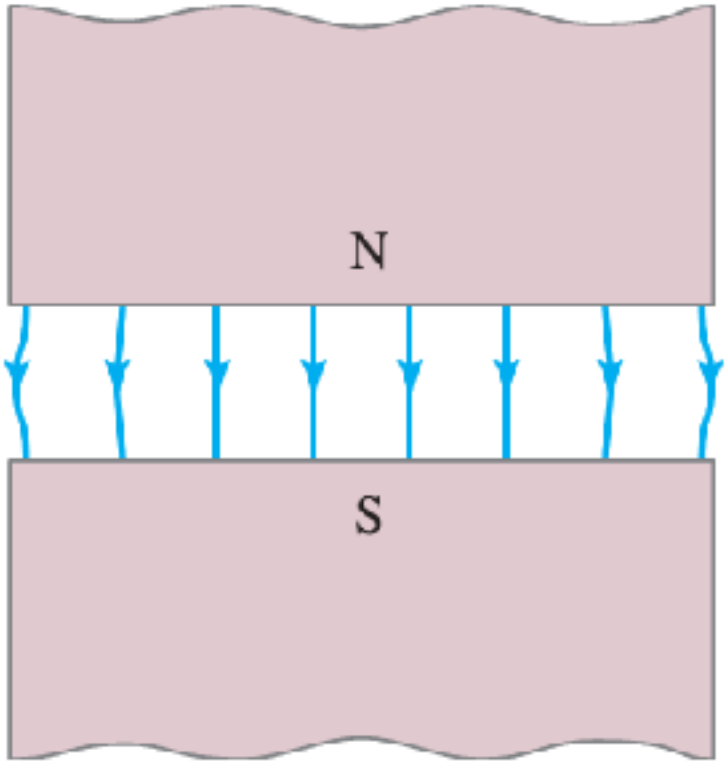

When poll is active, respond at **pollev.com/phillipurqui081**

Text **PHILLIPURQUI081** to **+61 480 025 509** once to join

# Magnetic Field lines

A compass needle is placed next to a bar magnet. How will it point?

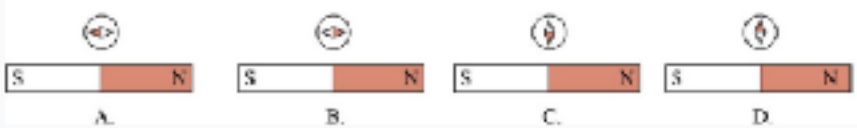


A.

B.

C.

D.

Powered by Poll Everywhere

Start the presentation to see live content. For screen share software, share the entire screen. Get help at pollev.com/app

# 20.2 Electric currents create magnetic fields

- The magnetic field of a bar magnet is due to the intrinsic magnetism of the electrons in the material. Each electron is a “tiny bar magnet” and due to some nifty quantum mechanics (ferromagnetic exchange coupling) the electrons all line up.
- Magnetic fields are also produced by electric currents

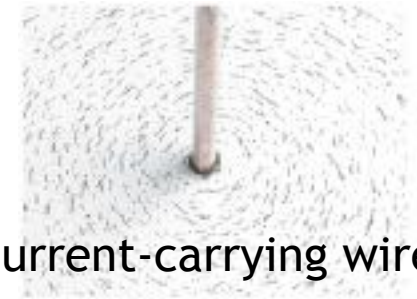


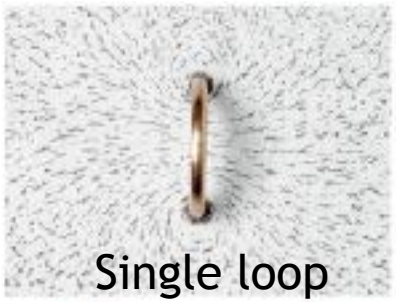

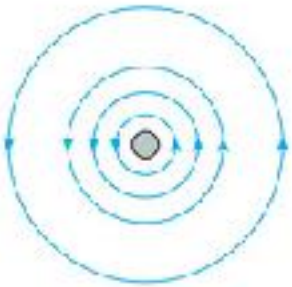

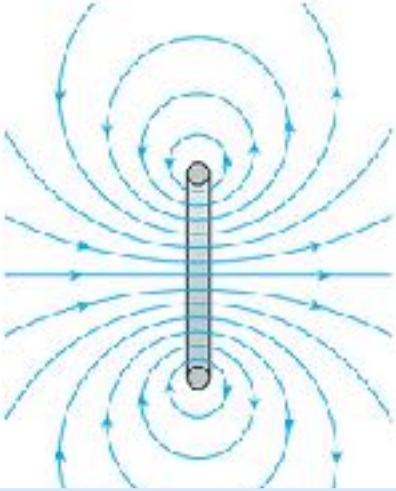

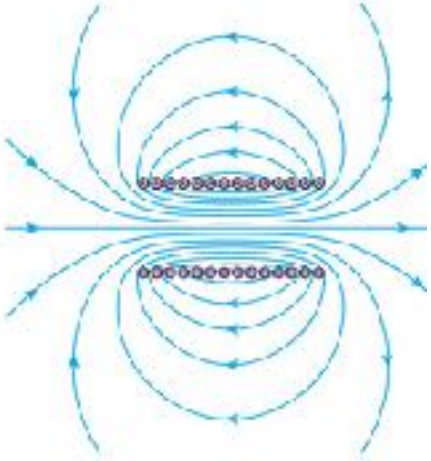

Which way is the current flowing? Into the page or out of the page?

# Right hand rule for magnetic fields from current

- Determine direction of a magnetic field from *Right Hand Rule*

1. With your <u>right</u> hand orient your thumb in the direction of the current
2. The direction of your fingers is the direction of the magnetic field

Long straight wire:

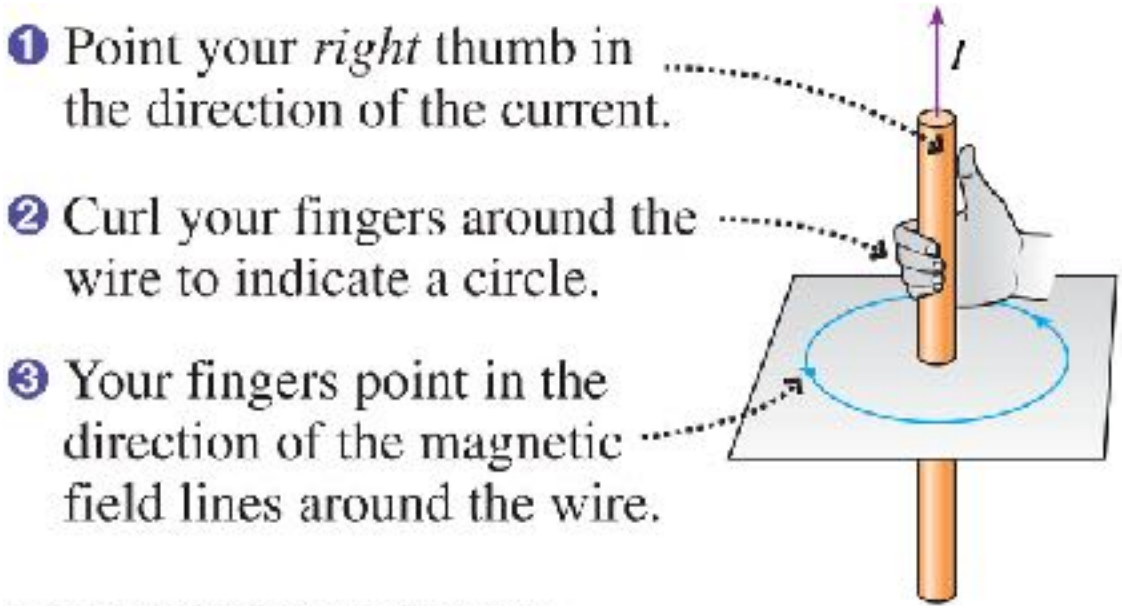


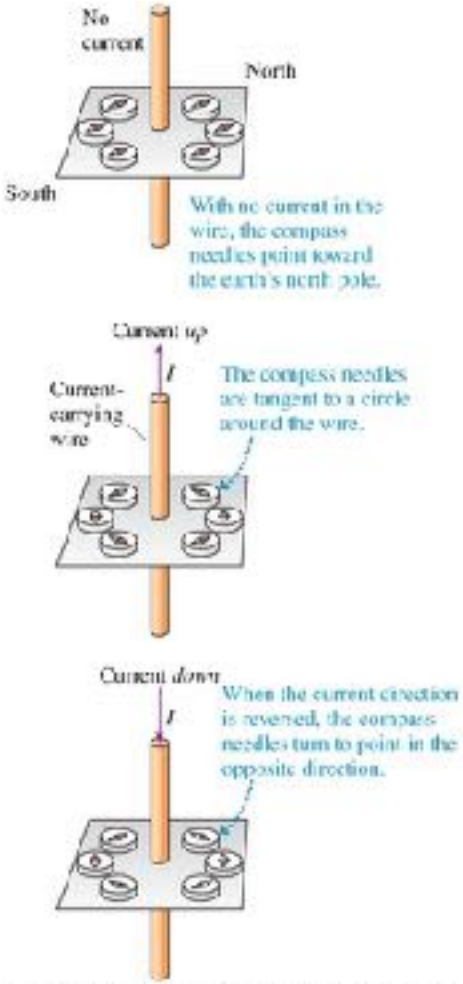


D Ea-10 Magnetic field around a current

# Magnetic fields from a current loop

- To describe magnetism, we will need to draw electric currents, electric fields, and magnetic fields in three dimensions:

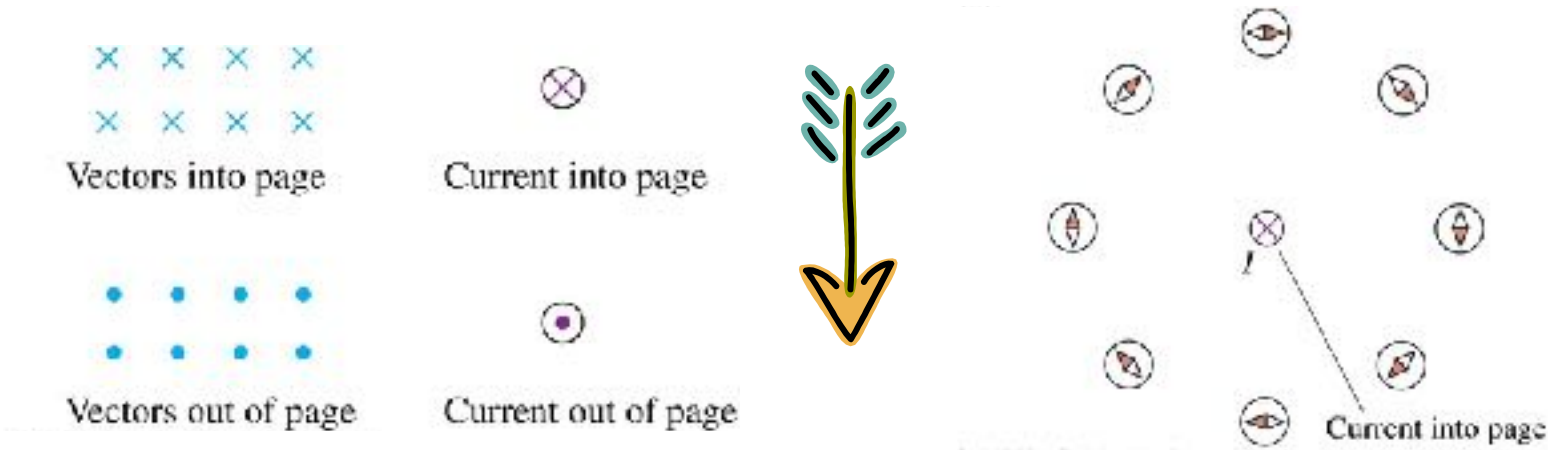


- For example, the magnetic field due to a current-carrying loop:

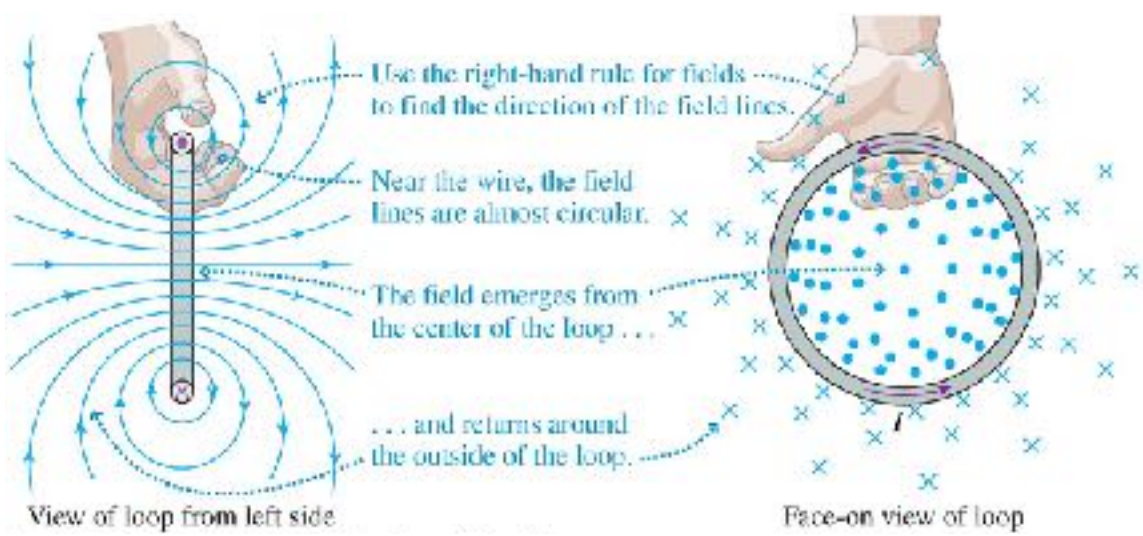


D Ea-4 Magnetic field at centre of coil

# 20.7 Magnetic field of a solenoid

- Many loops: magnetic fields add
- Magnetic equivalent of parallel plates for electric fields
- The magnetic field within a long solenoid is approximately uniform

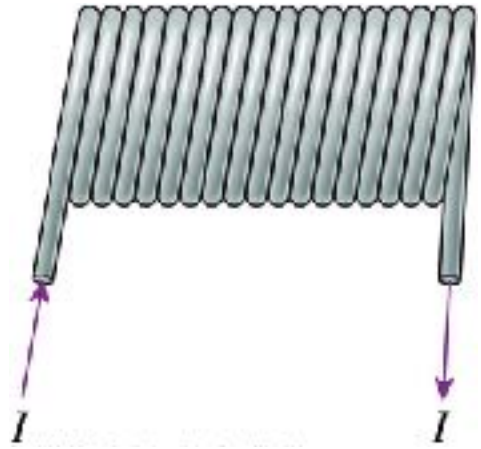


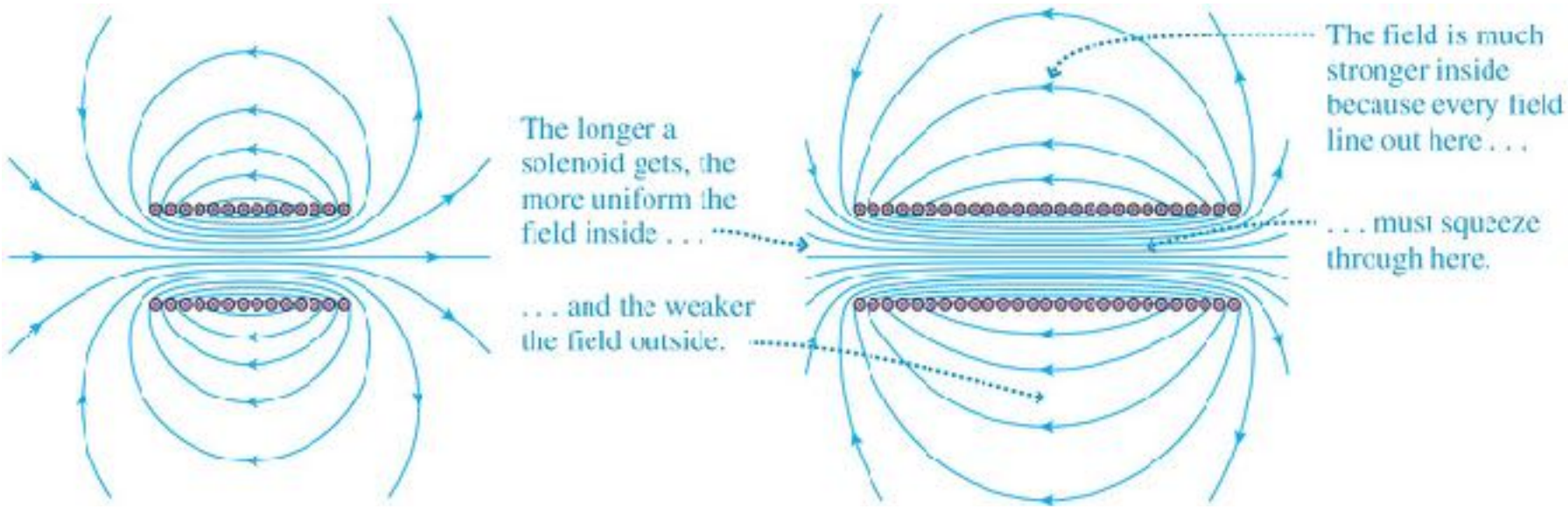


D Ea-7 The Solenoid + Compass

Demo Ea-7

# 20.2 Electric currents create magnetic fields

Which way is the current flowing? Into the page or out of the page?

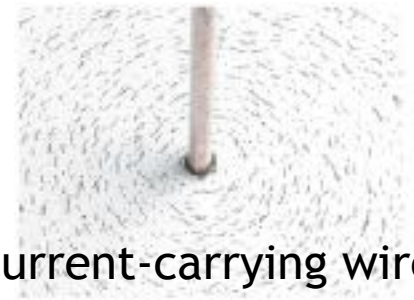

Current-carrying wire

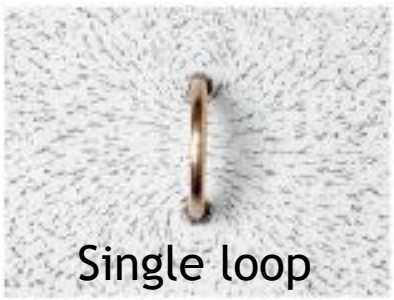

Single loop

Solenoid

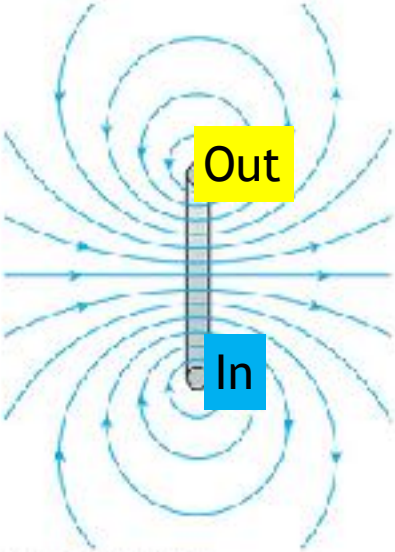


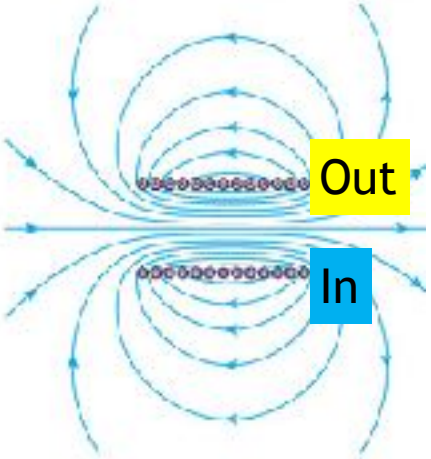

# Summary
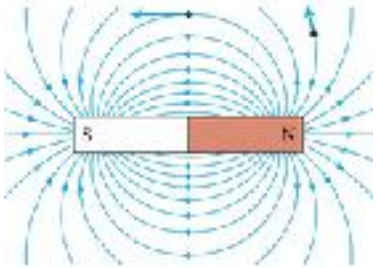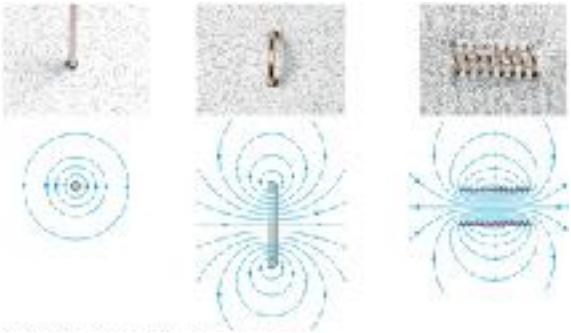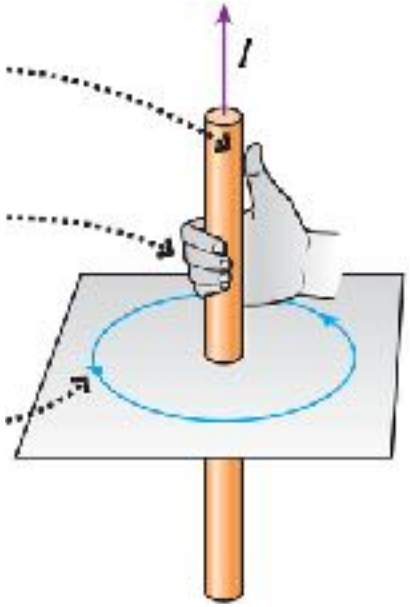
- Can measure magnetic field direction and strength with a compass needle
- Connecting directions gives a map of the magnetic field
- Electric currents generate magnetic fields: straight wire, loops, solenoids
- Right-hand rule: B field from current