5. Integrals over Surfaces

Surface Area

Let S be a smooth (except possibly at a finite number of points) parametric surface given by $\Phi : D \to S$

$$\Phi(u, v) = \big(x(u, v), y(u, v), z(u, v)\big).$$

The surface area of S is

$$\iint\limits_S dS = \iint\limits_D |\mathbf{T_u} \times \mathbf{T_v}| \; du \, dv = \iint\limits_D |\Phi_u \times \Phi_v| \; du \, dv$$

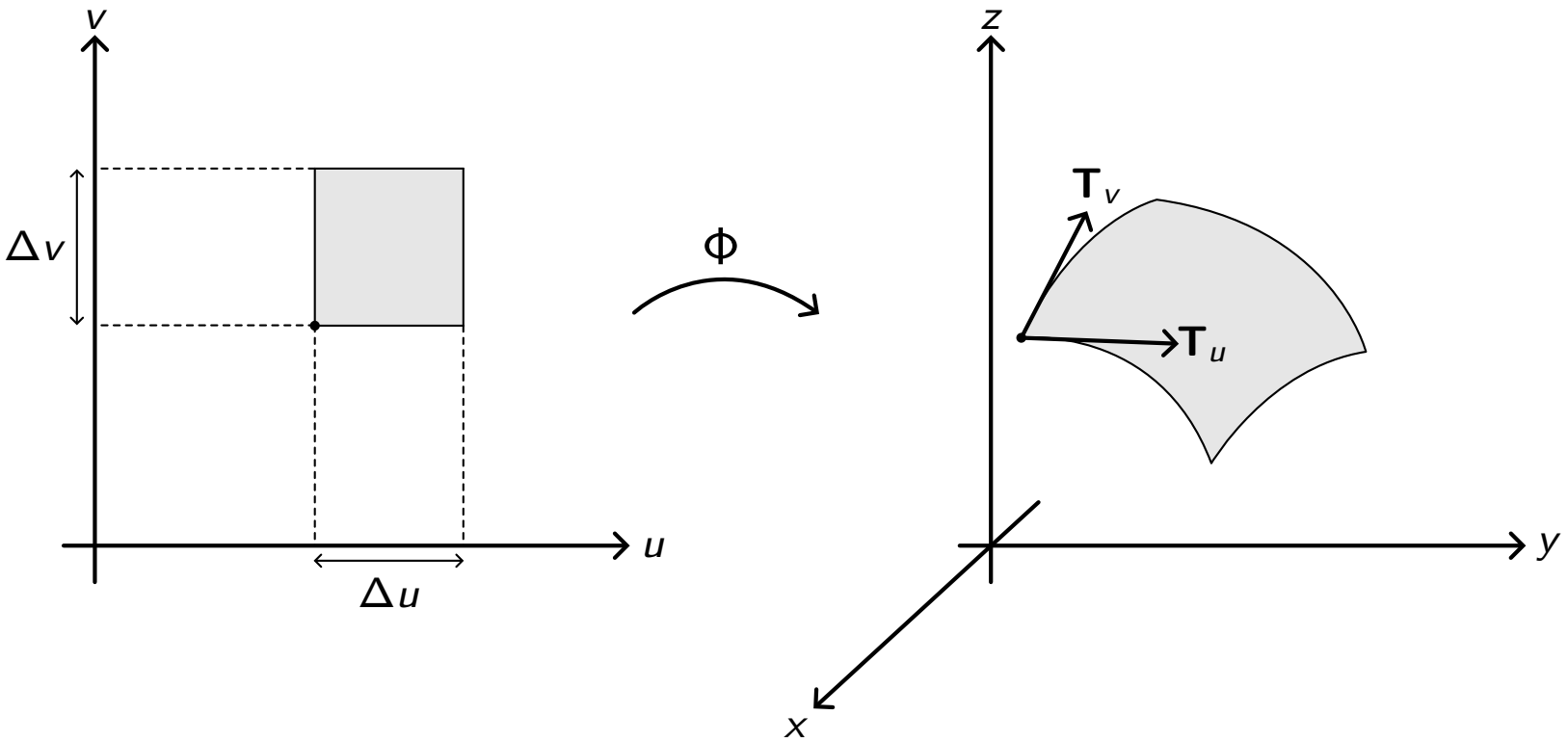

The area of a patch on the surface S can be approximated by the area of the parallelogram

$$|\Delta u \mathbf{T}_u \times \Delta v \mathbf{T}_v| = |\mathbf{T}_u \times \mathbf{T}_v| \Delta u \Delta v$$

Example 22.1

Find the surface area of the cone parametrised by

$$x = u\cos v,\ \ y = u\sin v,\ \ z = u,$$

for $0 \le v \le 2\pi,\ 0 \le u \le 1$.

Example 22.2

Find an expression for the surface area of the graph of a C^1 function $f(x, y)$, where $z = f(x, y)$ and $(x, y) \in D$.

5.22. Integrals of Scalar Functions over Surfaces

Let f be a continuous function defined on a smooth (except possibly at a finite number of points) parametric surface S given by $\Phi : D \to S$

$$\Phi(u, v) = \big(x(u, v), y(u, v), z(u, v)\big).$$

Then the surface integral of $f(x, y, z)$ over the surface S is

$$\begin{aligned}\iint_S f\, dS &= \iint_D f\left[\Phi(u, v)\right]\ \left|\mathbf{T_u} \times \mathbf{T_v}\right|\ du\, dv \\ &= \iint_D f\left[\Phi(u, v)\right] \left|\Phi_u \times \Phi_v\right| du\, dv\end{aligned}$$

Note

1. $\iint_S f\, dS$ is independent of the parametrisation of S, and is independent of the orientation of the surface.

2. The surface area of S is a special case of $\iint_S f\, dS$ where $f = 1$.

Physical Interpretation

Physical interpretation of $\iint\limits_S f\, dS$ depends on what f represents.

Example 1

If f is the mass per unit area on S, $\iint\limits_S f\, dS$ is the total mass of the surface S.

Example 2

If f is the charge per unit area on S, $\iint\limits_S f\, dS$ is the total charge on the surface S.

Example 22.3

Evaluate $\iint\limits_S z^2 \, dS$ where S is the unit sphere centred at the origin.

Example 22.4

Let S be the closed cylinder which is enclosed by $x^2 + y^2 = 9,\ z = 0,\ z = 15$. Find $\iint\limits_S z\, dS$.

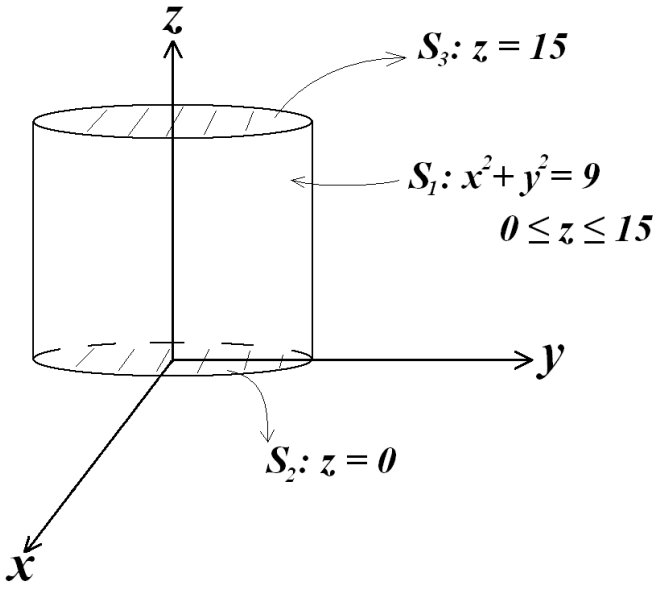

Special case: surface as a graph of a function

If S is a surface defined by $z = f(x, y)$, $(x, y) \in D$ then

$$\iint_S g(x, y, z)\, dS = \iint_D g(x, y, f(x, y))|\mathbf{T}_x \times \mathbf{T}_y|\, dx\, dy$$

$$= \iint_D g(x, y, f(x, y))\sqrt{f_x^2 + f_y^2 + 1}\, dx\, dy \quad \text{(Example 22.2)}$$

$$= \iint_D \frac{g(x, y, f(x, y))}{|\hat{\mathbf{n}} \cdot \mathbf{k}|}\, dx\, dy$$

where $\hat{\mathbf{n}}$ is either one of the two unit normals to S at $(x, y, f(x, y))$.

Partial proof.

By Example 22.2, $\mathbf{n} = (-f_x, -f_y, 1)$ is a normal vector

$$\Rightarrow \hat{\mathbf{n}} = \frac{(-f_x, -f_y, 1)}{\sqrt{f_x^2 + f_y^2 + 1}}$$

$$\Rightarrow \hat{\mathbf{n}} \cdot \mathbf{k} = \frac{1}{\sqrt{f_x^2 + f_y^2 + 1}}$$

$$\Rightarrow \frac{1}{\hat{\mathbf{n}} \cdot \mathbf{k}} = \sqrt{f_x^2 + f_y^2 + 1} = \frac{1}{|\hat{\mathbf{n}} \cdot \mathbf{k}|}$$

$\square$

Example 22.5

Find $\iint\limits_S x\, dS$ where S is the triangle with vertices $(1,0,0)$, $(0,1,0)$ and $(0,0,1)$.

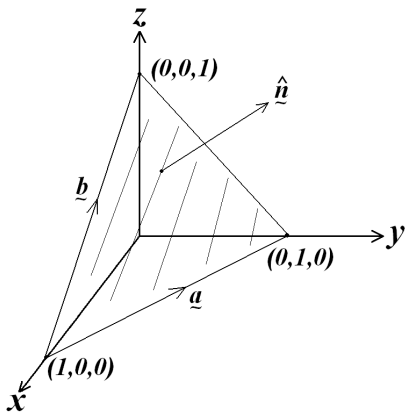

Surface integrals of vector fields

Let $\mathbf{F}$ be a continuous vector field defined on a smooth (except possibly at a finite number of points) oriented, parametric surface S with unit normal vector $\hat{\mathbf{n}}$. Then the surface integral of $\mathbf{F}$ over S (called the flux of $\mathbf{F}$ across S) is

$$\iint_S \mathbf{F} \cdot \, d\mathbf{S} = \iint_S \mathbf{F} \cdot \hat{\mathbf{n}} \, dS$$

Suppose S is given by $\Phi : D \to S$

$$\Phi(u, v) = (x(u, v), y(u, v), z(u, v))$$

If

$$\hat{\mathbf{n}} = \frac{\mathbf{T}_u \times \mathbf{T}_v}{|\mathbf{T}_u \times \mathbf{T}_v|}, \qquad \mathbf{T}_u = \Phi_u, \mathbf{T}_v = \Phi_v$$

then

$$\begin{aligned}\iint_S \mathbf{F} \cdot \, d\mathbf{S} &= \iint_D \mathbf{F} \cdot \frac{\mathbf{T}_u \times \mathbf{T}_v}{|\mathbf{T}_u \times \mathbf{T}_v|} |\mathbf{T}_u \times \mathbf{T}_v| \, du \, dv \\ &= \iint_D \mathbf{F} \cdot (\mathbf{T}_u \times \mathbf{T}_v) \, du \, dv\end{aligned}$$

Similarly, if $\hat{\mathbf{n}} = \frac{\mathbf{T}_v \times \mathbf{T}_u}{|\mathbf{T}_u \times \mathbf{T}_v|}$ (opposite orientation) then

$$\iint_S \mathbf{F} \cdot \, d\mathbf{S} = \iint_D \mathbf{F} \cdot (\mathbf{T}_v \times \mathbf{T}_u) \, du \, dv$$

Physical Interpretation

Example

If **F** is the velocity of a fluid, then the flux is the net quantity of fluid to flow across the surface per unit time in the direction of $\hat{\mathbf{n}}$.

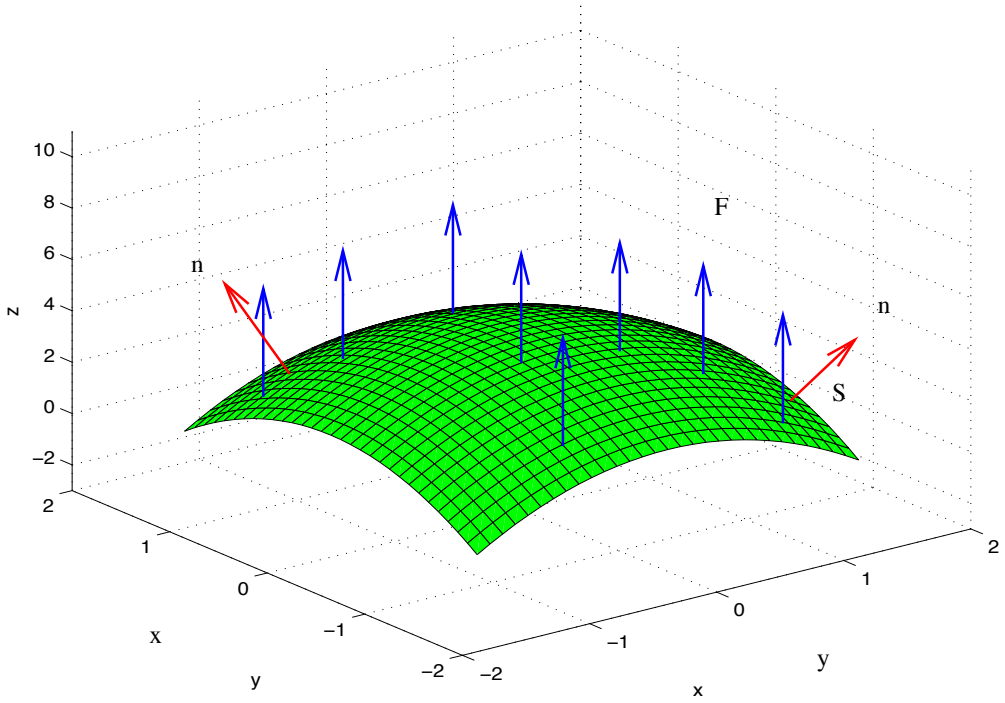

Example 23.1

Determine the flux of

$$\mathbf{F}(x, y, z) = (x, y, z)$$

across the unit sphere S centred at $(0, 0, 0)$ in the direction of the outward normal.

Example 23.2

Evaluate

$$\iint_S \left(x^3\,\mathbf{i} + y^3\,\mathbf{j}\right) \cdot \, d\mathbf{S}$$

where S is the closed cylinder bounded by

$$x^2 + y^2 = 4$$
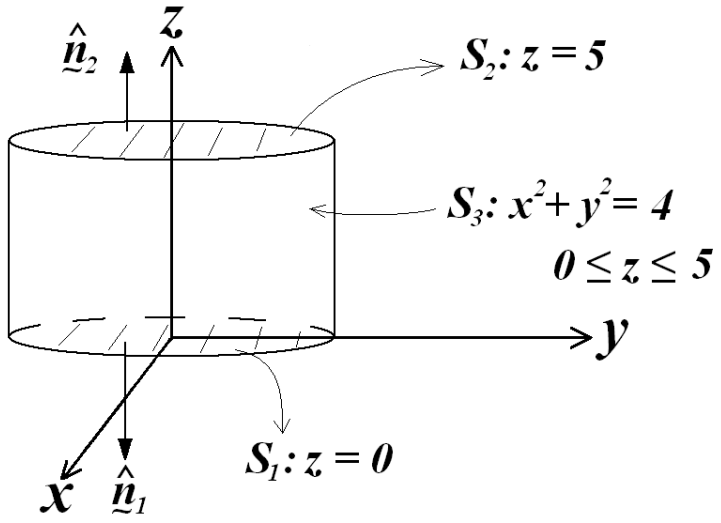
and the planes $z = 0$ and $z = 5$.