Lecture 3 recap

In Lecture 3, we:

- Learnt that solving an nth-order ODE involves n linearly independent complementary solutions.
- Learnt how to determine linear independence using the Wronskian.
- Implemented these concepts in examples alongside trial solutions.

Lecture 4

- In Lecture 4, we will:
  1. Learn how to write ODEs/IVPs as 1st-order systems
  2. Connect solutions of constant coefficient problems with eigenvalues and eigenvectors (linear algebra)

Systems of first-order linear ODEs

Let's take a different perspective on linear ODEs.

Definition (Higher order ODEs as a system)

$$y^{(n)}(t) + f_{n-1}(t)y^{(n-1)}(t) + \cdots + f_1(t)y'(t) + f_0(t)y(t) = g(t)$$

is equivalent to the following system of n first order ODEs:

$$\frac{\mathrm{d}}{\mathrm{d}t}\begin{pmatrix} z_1(t) \\ z_2(t) \\ \vdots \\ z_{n-1}(t) \\ z_n(t) \end{pmatrix} = \begin{pmatrix} 0 & 1 & \cdots & 0 \\ 0 & 0 & \cdots & 0 \\ \vdots & \vdots & \ddots & \vdots \\ 0 & 0 & \cdots & 1 \\ -f_0(t) & -f_1(t) & \cdots & -f_{n-1}(t) \end{pmatrix}\begin{pmatrix} z_1(t) \\ z_2(t) \\ \vdots \\ z_{n-1}(t) \\ z_n(t) \end{pmatrix} + \begin{pmatrix} 0 \\ 0 \\ \vdots \\ 0 \\ g(t) \end{pmatrix}$$

where $z_i(t) = y^{(i-1)}(t)$ for $i = 1, \ldots, n$

Case study 1: Electric circuits

- The study of **IVPs - homogeneous systems** arising in electrical circuits has broad importance in electronics and beyond.
- Applications include:
  - communications systems. For example, satellites rely on electronic devices to measure the impacts of climate change on the environment as well as monitor impending hazards.
  - defibrillator circuits in biomedical applications
  - development of electric vehicle charging technology
  - ignition systems in automobiles
  - modelling other systems (e.g. mechanical systems like car's suspension etc.)

Case study 1: Tackling ventricular fibrillation (Problem 1.1)[1]

Express the governing system of ODEs for the following electrical circuit: (a) in matrix form and (b) as a single 2nd order ODE.

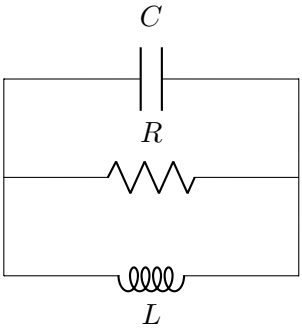

C, R and L are constants.

$$\left\{ \begin{aligned} \frac{\mathrm{d}I}{\mathrm{d}t} &= \frac{V}{L}, \\ \frac{\mathrm{d}V}{\mathrm{d}t} &= -\frac{I}{C} - \frac{V}{RC} \end{aligned} \right\}$$

[1] Anantharaman et al (2017) Role of peak current in conversion of patients with ventricular fibrillation. *Singapore Med J.*

Exercise 1.9: Write $y''(t) + c\,y = 0$ as a 1st-order ODE system

Exercise 1.10: Write $y''(t) + b\,y'(t) + c\,y = 0$ as a 1st-order ODE system

Vector-valued ODEs and IVPs

Definition (Vector-valued first-order linear ODEs)

- Let $\boldsymbol{y}(t)$ and $\boldsymbol{b}(t)$ be vectors of length n whose elements are *functions*
- Let $\mathbf{A}(t)$ be an $n \times n$ matrix whose elements are also *functions*
- Then

$$\boldsymbol{y}'(t) = \mathbf{A}(t)\boldsymbol{y}(t) + \boldsymbol{b}(t)$$

is a vector-valued first-order linear ODE

Definition (IVP)

The corresponding IVP for a vector-valued first order ODE has initial condition

$$\boldsymbol{y}(t_0) = \boldsymbol{y}_0$$

where $\boldsymbol{y}_0$ is a vector of initial values.

Connection to linear algebra

- $\mathsf{T} = \dfrac{\mathrm{d}}{\mathrm{d}t} - \mathbf{A}\cdot$ is a *linear transformation* which operates on *vector-valued functions*.
- General solution is a complementary solution ($\boldsymbol{b} = \mathbf{0}$) plus a particular solution.

Theorem (Solution space of vector-valued first order linear ODEs)

- If $\mathbf{A}$ is continuous, the solution space has dimension n.
- A vector-valued first-order linear IVP has a unique vector-valued solution which is differentiable for all t on any interval in which $\mathbf{A}$ and $\boldsymbol{b}$ are continuous.

The Wronskian

Definition

- The Wronskian for $\boldsymbol{y}_1(t), \ldots, \boldsymbol{y}_n(t)$ is

$$\mathrm{wr}[\boldsymbol{y}_1, \ldots, \boldsymbol{y}_n](t) = \det \left(\boldsymbol{y}_1 \middle| \ldots \middle| \boldsymbol{y}_n \right)$$

- If $\exists\, t$: $\mathrm{wr}[\boldsymbol{y}_1, \ldots, \boldsymbol{y}_n](t) \neq 0$ then $\boldsymbol{y}_1(t), \ldots, \boldsymbol{y}_n(t)$ are linearly independent.
  - If any of $\boldsymbol{y}_1(t), \ldots, \boldsymbol{y}_n(t)$ are linearly dependent then $\mathrm{wr}[\boldsymbol{y}_1, \ldots, \boldsymbol{y}_n](t) = 0$ for all t.
  - $\mathrm{wr}[\boldsymbol{y}_1, \ldots, \boldsymbol{y}_n](t) = 0$ for some $t \not\Rightarrow \boldsymbol{y}_1(t), \ldots, \boldsymbol{y}_n(t)$ are linearly dependent.

Constant coefficients

Let $\mathbf{A} \in \mathbb{R}^{n\times n}$ and $\boldsymbol{y}' = \mathbf{A}\boldsymbol{y}$.

- Trial exponential solutions $\boldsymbol{y} = \boldsymbol{v}\,\mathrm{e}^{\lambda t}$ where $\lambda \in \mathbb{C}$ and $\boldsymbol{v} \in \mathbb{C}^n$.
- $\lambda \boldsymbol{v}\mathrm{e}^{\lambda t} = \mathbf{A}\boldsymbol{v}\mathrm{e}^{\lambda t}$ and so $\mathbf{A}\boldsymbol{v} = \lambda \boldsymbol{v}$

Recall linear algebra: *eigenvalues and eigenvectors*.

- Solve $\det(\boldsymbol{A} - \lambda \boldsymbol{I}) = 0$ to find the eigenvalues, λ_i
- Find the corresponding eigenvectors, $\boldsymbol{v}_i$
- The eigenvectors form a basis for the solution space

Case study 1: Vehicle platooning (Problem 1.2)[1]

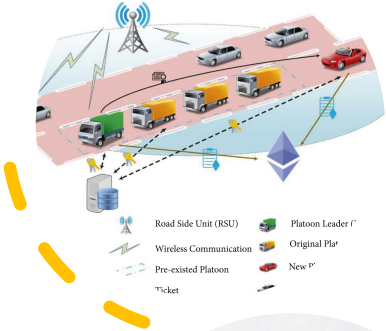

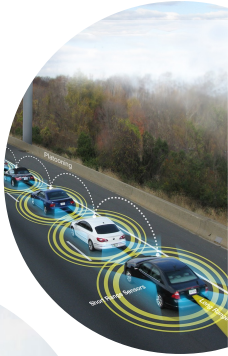

[1] Wang et al (2022) *Damping behaviour analysis for connected automated vehicles with linear car following control*, **Transportation Research Part C: Emerging Technologies**

Case study 1: Making vehicle platoons safer (Problem 1.2)

$$\frac{\mathrm{d}^2x}{\mathrm{d}t^2} + 3\frac{\mathrm{d}x}{\mathrm{d}t} + 2x = 0, \quad x(0) = x_0, \quad x'(0) = v_0$$

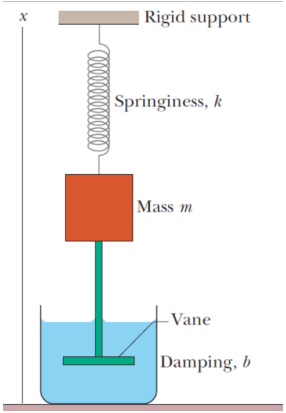

‘Linear algebrise it’

Rewrite ODE as (Slide 7)

$$\frac{\mathrm{d}}{\mathrm{d}t}\begin{pmatrix} x \\ v \end{pmatrix} = \mathbf{A}\begin{pmatrix} x \\ v \end{pmatrix} \qquad \text{where} \qquad \mathbf{A} = \begin{pmatrix} 0 & 1 \\ -2 & -3 \end{pmatrix} \qquad \text{and} \qquad \begin{pmatrix} x(0) \\ v(0) \end{pmatrix} = \begin{pmatrix} x_0 \\ v_0 \end{pmatrix}$$

By trialling exponential solutions, solve the system of ODEs and establish linear independence of the solutions.