INFO20003 Database Systems

Lecturer: Egemen Tanin

Lecture 18
Database Administration

Week 9

THE UNIVERSITY OF MELBOURNE

Capacity Planning

Capacity Planning

"Capacity Planning is the process of predicting when future load levels will saturate the system and determining the most cost-effective way of delaying system saturation as much as possible."

- Menasce and Virgilio (2002) 'Capacity Planning for Web Services'. Prentice Hall.

- When implementing a database, need to consider:
  - disk space requirements
  - transaction throughput
  - at go-live and throughout the life of the system
    - E.g. plan for 7 years but can be 20 years

© University of Melbourne

Estimating Database Usage

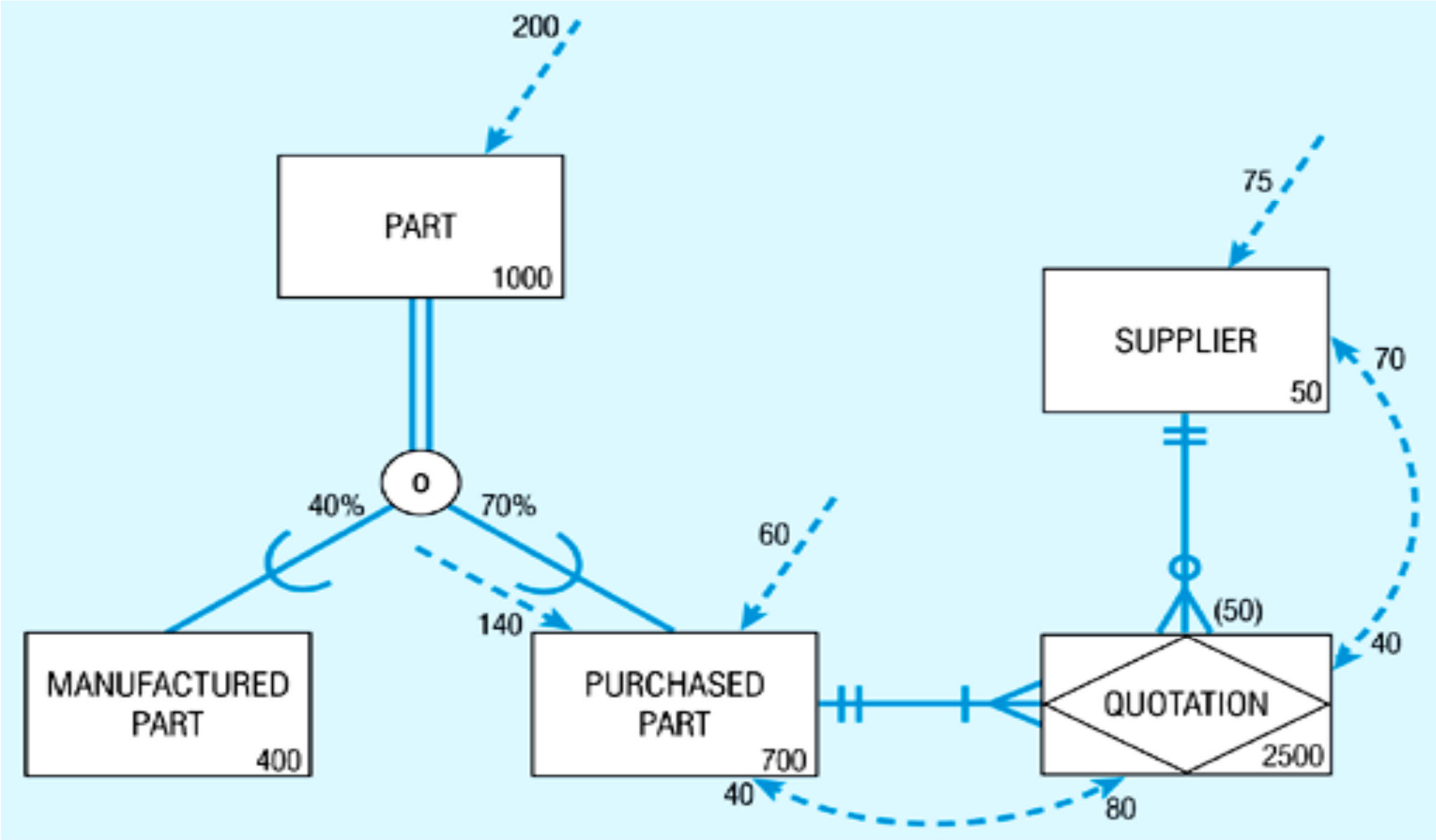

© University of Melbourne

Estimating Database Usage

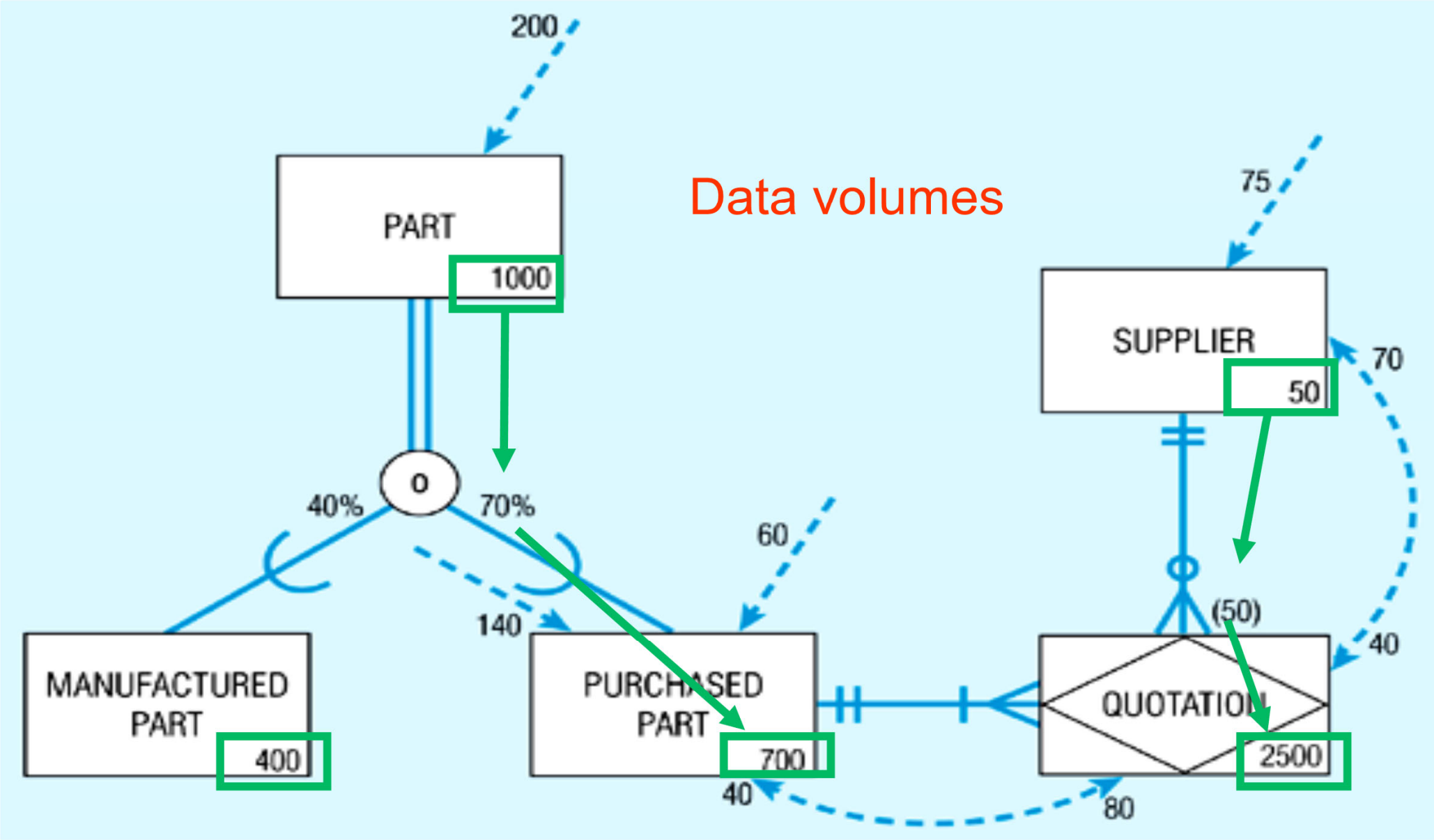

© University of Melbourne

Estimating Database Usage

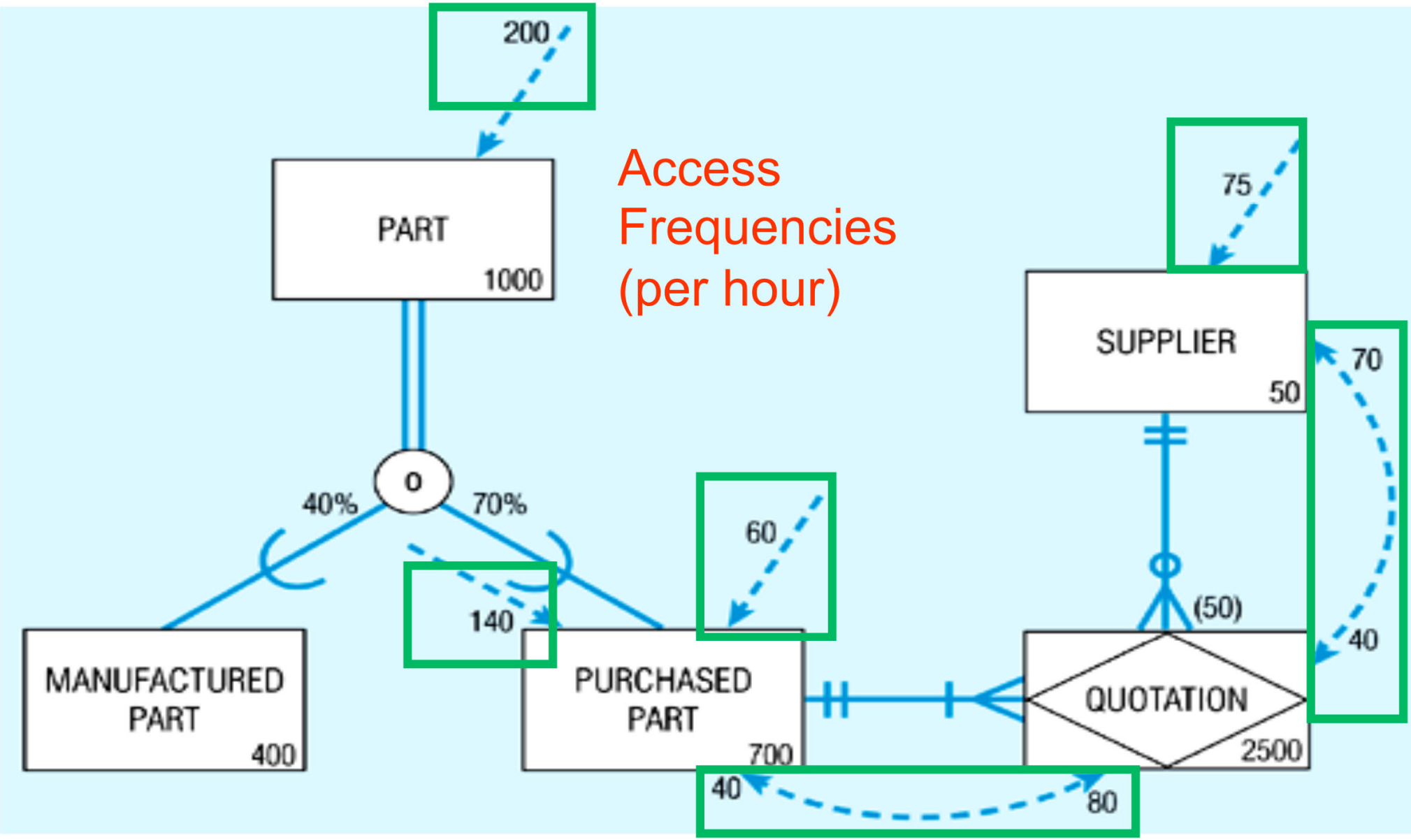

© University of Melbourne

Capacity Planning in the dev life cycle

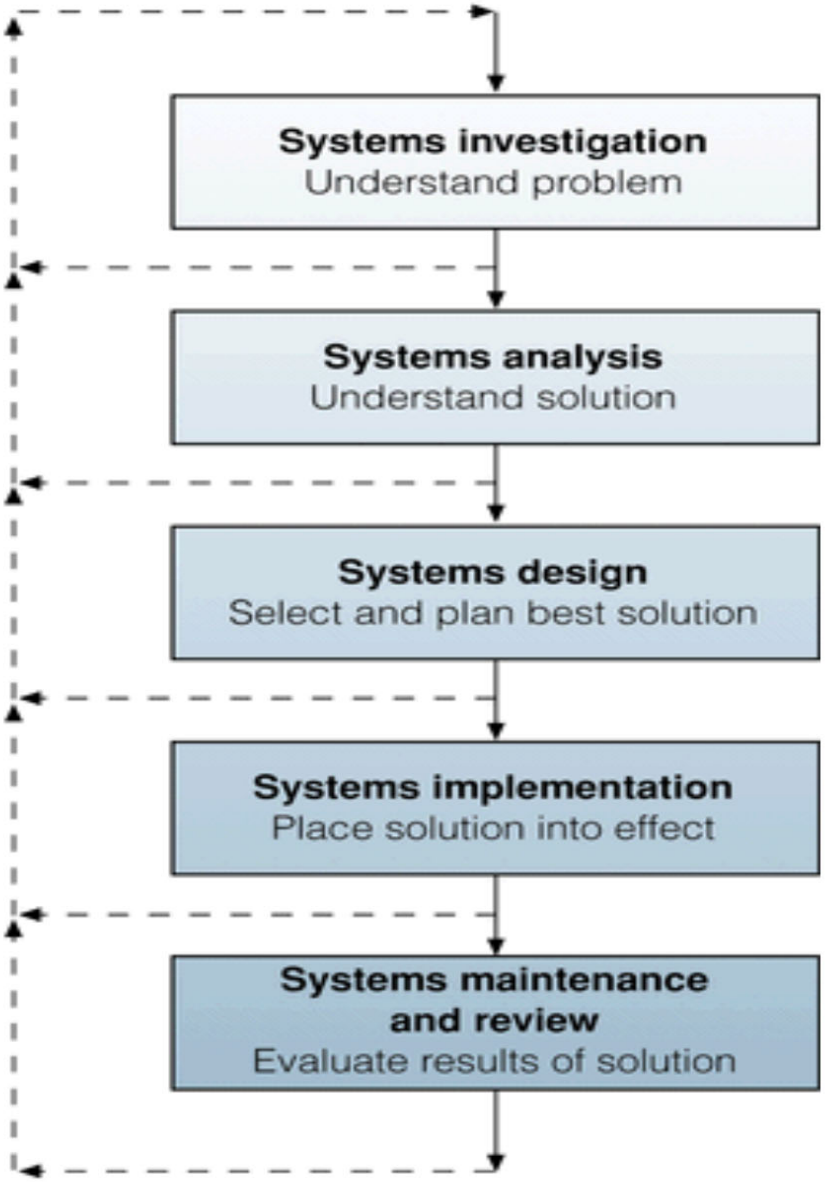

calculate expected disk usage and transaction load

monitor and predict disk usage and transaction load

© University of Melbourne

Estimating disk space requirements

- Which estimation methodology to use?
  - many vendors sell capacity planning solutions
  - most have the same ideas at their core
  - here we present the core concepts
- Treat database size as the sum of <u>all table sizes</u>
  - Table size = number of rows * average row width

width

Id	PostedBy	Forum	Content	ParentPost	WhenPosted
1	4	NULL	April is the cruellest month, breeding	4	2015-07-23 11:00:00
2	4	3	Lilacs out of the dead land, mixing	NULL	2015-03-11 11:00:00
3	3	NULL	Memory and desire, stirring	17	2014-11-04 11:00:00
4	3	NULL	Dull roots with spring rain.	68	2015-07-29 11:00:00
5	3	NULL	Winter kept us warm, covering	38	2014-11-30 11:00:00
6	3	NULL	Earth in forgetful snow, feeding	75	2015-06-29 10:00:00
7	3	NULL	A little life with dried tubers.	6	2015-06-07 10:00:00
8	5	NULL	Summer surprised us, coming over the Starnber...	76	2015-07-20 10:00:00
9	5	NULL	With a shower of rain; we stopped in the colonn...	21	2014-12-03 11:00:00
10	4	3	And went on in sunlight, into the Hofgarten,	NULL	2015-07-21 10:00:00

height

© University of Melbourne

Calculating row widths

- Use information about storage sizes of different data types: https://dev.mysql.com/doc/refman/8.0/en/storage-requirements.html

Storage Requirements for Numeric Types

Data Type	Storage Required
TINYINT	1 byte
SMALLINT	2 bytes
MEDIUMINT	3 bytes
INT, INTEGER	4 bytes
BIGINT	8 bytes
FLOAT(*p*)	4 bytes if 0 <= *p* <= 24, 8 bytes if 25 <= *p* <= 53
FLOAT	4 bytes
DOUBLE [PRECISION], REAL	8 bytes
DECIMAL(*M*, *D*), NUMERIC(*M*, *D*)	Varies; see following discussion
BIT(*M*)	approximately (*M*+7)/8 bytes

© University of Melbourne

Calculating row widths

- These sizes are for MySQL and are slightly different for other vendors: https://dev.mysql.com/doc/refman/8.0/en/storage-requirements.html

Storage Requirements for Date and Time Types

Data Type	Storage Required
DATE	3 bytes
TIME	3 bytes
DATETIME	8 bytes
TIMESTAMP	4 bytes
YEAR	1 byte

© University of Melbourne

Calculating row widths

- https://dev.mysql.com/doc/refman/8.0/en/storage-requirements.html
  For VARCHAR/BLOB we use the average size (from catalog)

Storage Requirements for String Types

In the following table, *M* represents the declared column length in characters for nonbinary string types and bytes for binary string types. *L* represents the actual length in bytes of a given string value.

Data Type	Storage Required
CHAR(*M*)	*M* × *w* bytes, 0 <= *M* <= 255, where *w* is the number of bytes required for the maximum-length character in the character set. See Section 14.6.3.12.5, "Physical Row Structure" for information about CHAR data type storage requirements for InnoDB tables.
BINARY(*M*)	*M* bytes, 0 <= *M* <= 255
VARCHAR(*M*), VARBINARY(*M*)	*L* + 1 bytes if column values require 0 − 255 bytes, *L* + 2 bytes if values may require more than 255 bytes
TINYBLOB, TINYTEXT	*L* + 1 bytes, where *L* < 2^8
BLOB, TEXT	*L* + 2 bytes, where *L* < 2^{16}
MEDIUMBLOB, MEDIUMTEXT	*L* + 3 bytes, where *L* < 2^{24}
LONGBLOB, LONGTEXT	*L* + 4 bytes, where *L* < 2^{32}
ENUM('*value1*','*value2*',...)	1 or 2 bytes, depending on the number of enumeration values (65,535 values maximum)

© University of Melbourne

Estimate growth of tables

- How will tables grow over time?
- Gather estimates during system analysis, e.g.
  - "The company sells 1000 products. There are 2,000,000 customers who place, on average, 5 orders each per month. An average order is for 8 different products."

therefore:
the Product table has 1000 rows.
the Customer table has 2,000,000 rows.
the Orders table grows by 10,000,000 rows per month.
the OrderItems table grows by 80,000,000 rows per month.

© University of Melbourne

Estimate growth of tables

- Using this simplified database as an example, assume there are:
  - 100 forums
  - 1 million users

and assume that:

  - users post average 30 times per month

we calculate:

  - Post table grows by 1M rows / day
  - This is 12 inserts per second

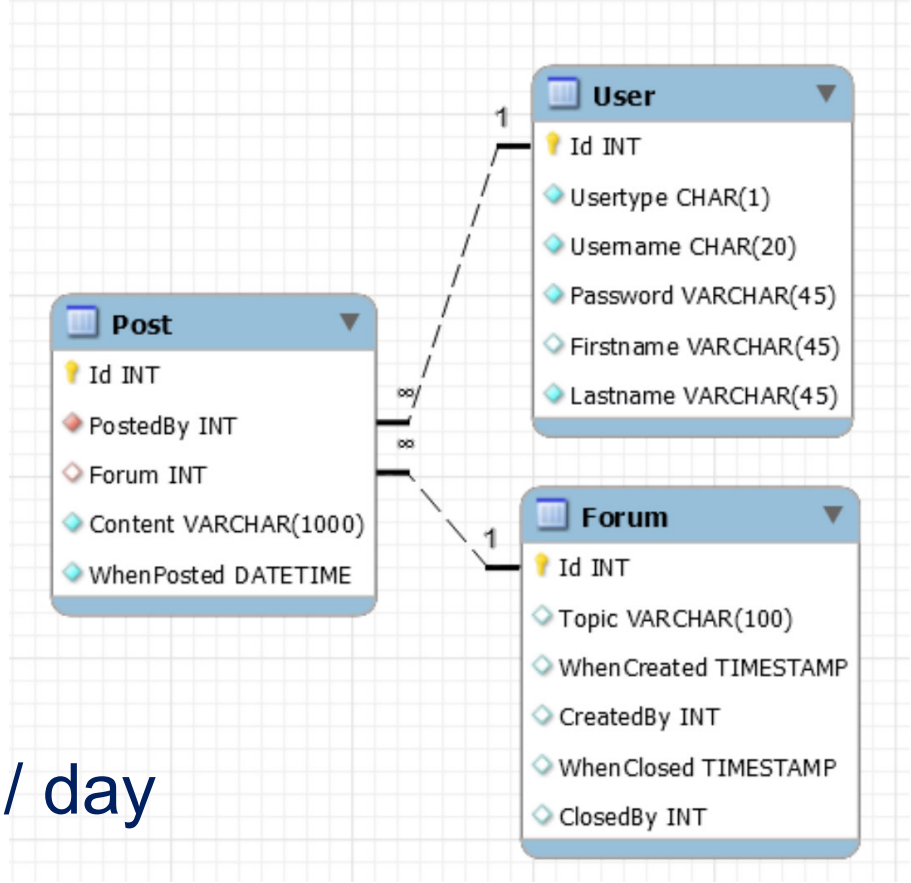

© University of Melbourne

Calculate disk space per table

column	type	width	rows	1 month	1 year
USER					
Id	int	4			
UserType	char(1)	1			
UserName	char(10)	10			
Password	char(10)	10			
FirstName	varchar(45)	12			
LastName	varchar(45)	15			
ROW WIDTH		**52**	1,000,000	1,100,000	2,000,000
DISK SPACE			52,000,000	57,200,000	**104,000,000**
FORUM					
Id	int	4			
Topic	varchar(100)	50		per month	
WhenCreated	timestamp	4		1	
CreatedBy	int	4			
ClosedBy	int	4			
ROW WIDTH		**66**	100	101	113
DISK SPACE			6,600	6,666	**7,458**
POST					
Id	bigint	8			
PostedBy	int	4		per user per month	
Forum	int	4		30	
Content	varchar(1000)	500			
WhenPosted	datetime	8			
ROW WIDTH		**524**	0	30,000,000	390,000,000
DISK SPACE			0	15,720,000,000	**204,360,000,000**

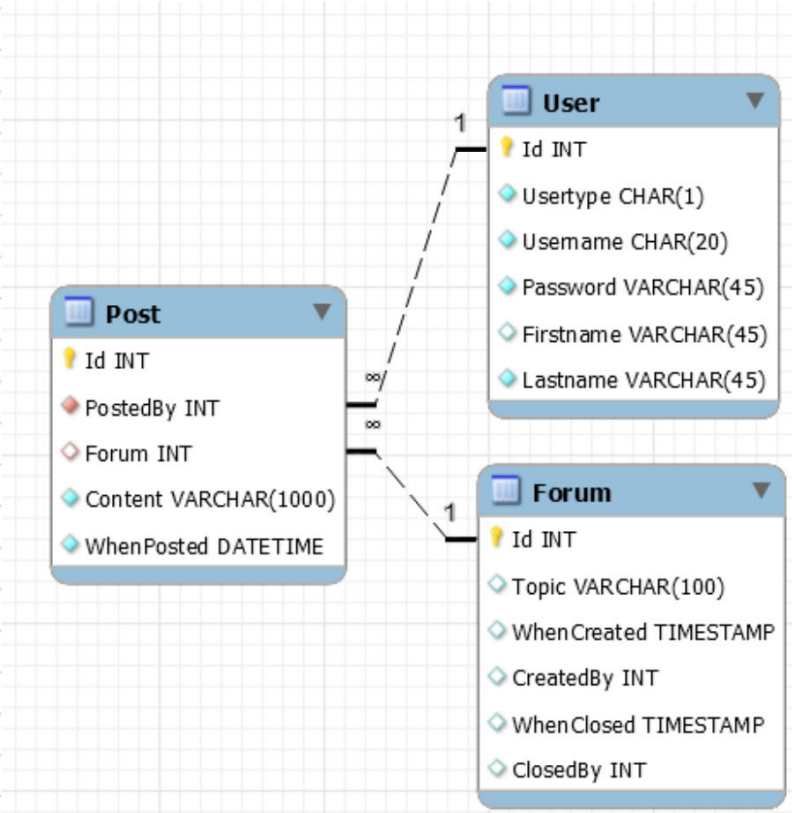

Projected total storage requirements

Table	*Row width*	*No. rows at 1 year*	*Size*
User	52 bytes	2,000,000	104 Mb
Forum	66 bytes	113	0.007 Mb
Post	524 bytes	390,000,000	204 Gb
		TOTAL ->	*204 Gb*

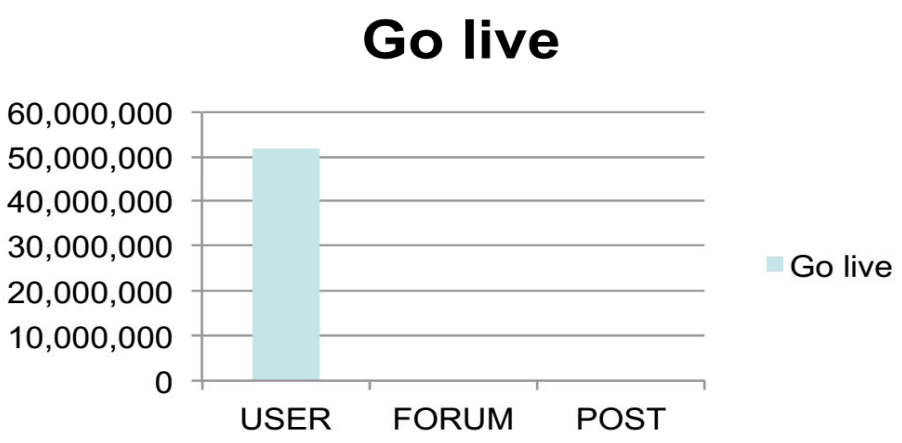

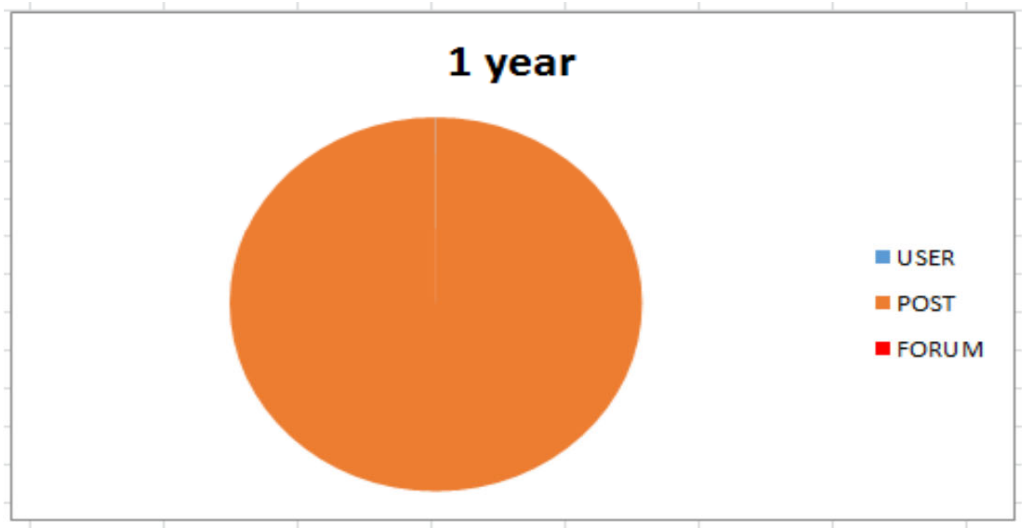

© University of Melbourne

Estimating transaction load

- Consider each business transaction
  - how often will transaction each be run?
  - for each transaction, what SQL statements are being run?

- For example, consider this fictitious banking application:

Transaction	Selects	Inserts	Updates	Delete	SQL/tr	Tr/cust/month	SQL/month	SQL/second
Withdraw	1	1	1		3	20	60,000,000	23
Deposit		1	1		2	5	10,000,000	4
Transfer	1	1	2		4	8	32,000,000	12
								39
no. customers		1,000,000						

© University of Melbourne

DBs store so much more

- Under the hood there is so much more stored
- Capacity planning is a rough estimation

© University of Melbourne

THE UNIVERSITY OF MELBOURNE

Backup and Recovery

What is a Backup

- A backup is a copy of your data
  - however there are several types of backup
- If data becomes corrupted or deleted or held to ransom it can be restored from the backup copy
- A backup and recovery strategy is needed
  - To plan how data is backed up
  - To plan how it will be recovered

© University of Melbourne

Protect data from different errors

- human error
  - e.g. accidental drop or delete

- hardware or software malfunction
  - bug in application
  - hard drive (failure or corruption)
  - CPU
  - memory

© University of Melbourne

Must also protect against

- malicious activity
  - security compromise
    - server, database, application

- natural or man-made disasters
  - consider the *scale* of the damage

- government regulation
  - historical archiving rules
  - metadata collection
  - privacy rules

Security

Texas cops lose evidence going back eight years in ransomware attack

We have to get very, very tough on cyber and cyber warfare… and backups?

By Alexander J Martin 27 Jan 2017 at 16:57 36 SHARE ▼

♫ I hacked the sheriff, but I did not hack his deputy ♫

Updated Cockrell Hill, Texas has a population of just over 4,000 souls and a police force that managed to lose eight years of evidence when a departmental server was compromised by ransomware.

In a public statement, the department said the malware had been introduced to the department's systems through email. Specifically, it arrived "from a cloned email address imitating a department issued email address" and after taking root, requested 4 Bitcoin in ransom, worth about $3,600 today, or "nearly $4,000" as the department put it.

© University of Melbourne

Categories of Failures

Failures can be divided into the following categories:

- Statement failure
  - Syntactically incorrect
- User process failure
  - The process doing the work fails (error occurs, dies)
- Network failure
  - Network failure between the user and the database
- User error
  - User accidentally drops the rows, table, database
- Memory failure
  - Memory fails, becomes corrupt
- Media failure
  - Disk failure, corruption, deletion

© University of Melbourne

Types of Backups

- Physical vs Logical
- Online vs Offline
- Full vs Incremental
- Onsite vs Offsite

© University of Melbourne

Physical backup

- Physical backup
  - raw copies of files and directories
  - suitable for large databases that need fast recovery
  - database is preferably offline ("cold" backup) when backup occurs
    - MySQL Enterprise automatically handles *file* locking, so database is not wholly off line
  - backup = exact copies of the database directories and files
  - backup should include logs
  - backup is only portable to machines with a similar configuration
  - to restore
    - shut down DBMS
    - copy backup over current structure on disk
    - restart DBMS

© University of Melbourne

Logical backup

- Logical backup
  - backup completed through SQL queries
  - slower than physical
    - SQL Selects rather than OS copy
  - output is larger than physical
  - doesn't include log or config files
  - machine *independent*
  - server is *available* during the backup
  - in MySQL can use the backup using
    - Mysqldump
    - SELECT … INTO OUTFILE
  - to restore
    - Use mysqlimport, or LOAD DATA INFILE within the mysql client

© University of Melbourne

Online vs Offline backup

- Online (or HOT) backup
  - backups occur when the database is “live”
  - clients don’t realise a backup is in progress
  - need to have appropriate locking to ensure integrity of data

- Offline (or COLD) backup
  - backups occur when the database is stopped
  - to maximize availability to users take backup from replication server not live server
  - simpler to perform
  - cold backup is preferable, but not available in all situations e.g. applications without downtime

© University of Melbourne

Full vs Incremental backup

- Full
  - a full backup is where the complete database is backed up
    - may be Physical or Logical, Online or Offline
  - it includes everything you need to get the database operational in the event of a failure
- Incremental
  - only the changes since the last backup are backed up
  - for most databases this means only backup log files
  - to restore:
    - stop the database, copy backed up log files to disk
    - start the database and tell it to redo the log files

© University of Melbourne

Create a Backup Policy

- Backup strategy is usually a combination of full and incremental backups
- For example:
  - weekly full backup, weekday incremental backup

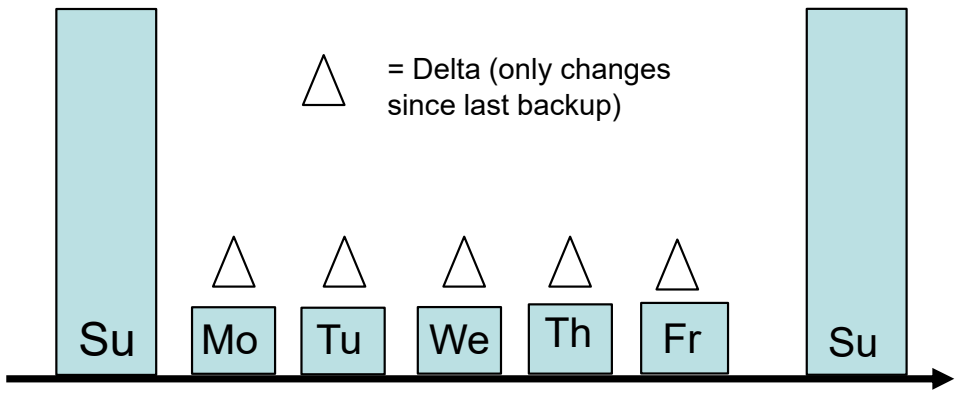

- Conduct backups when database load is low
- If using replication, use the mirror database for backups to negate any performance concerns with the primary database
- TEST your backup before you NEED your backup (crucial)

© University of Melbourne

Offsite Backup

- Enables *disaster recovery*
  (because backup is not physically near the disaster site)
- Example solutions:
  - backup tapes transported to underground vault
  - remote mirror database maintained via replication
  - backup to Cloud (see figure below)

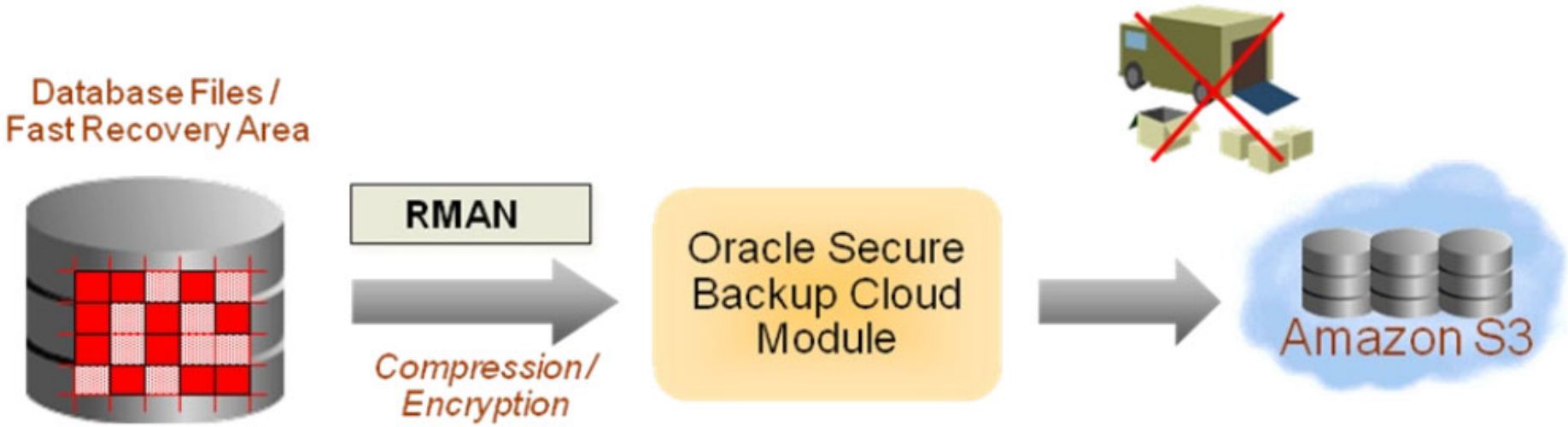

Figure 1. Oracle Database backup in the Cloud

© University of Melbourne