Electrical Breakdown

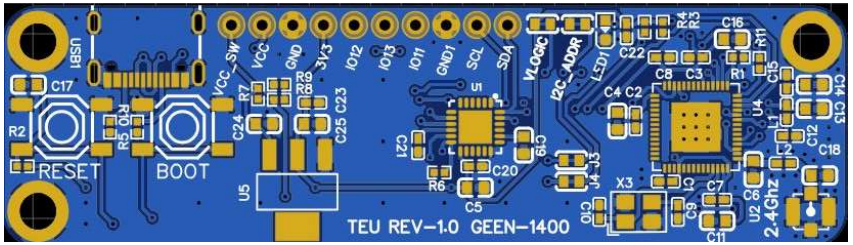

Tong Electronics Unit (TEU) Features:
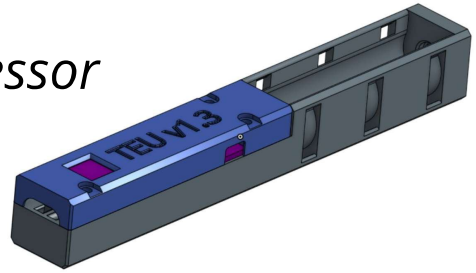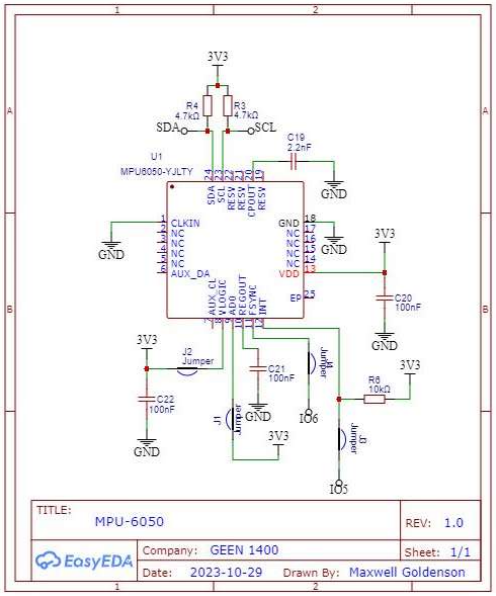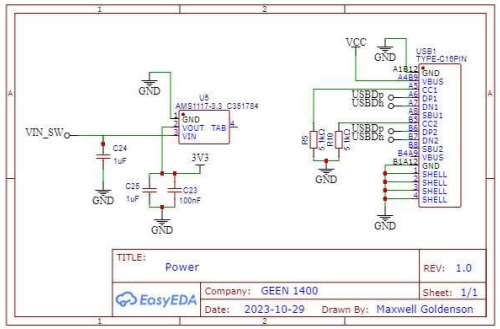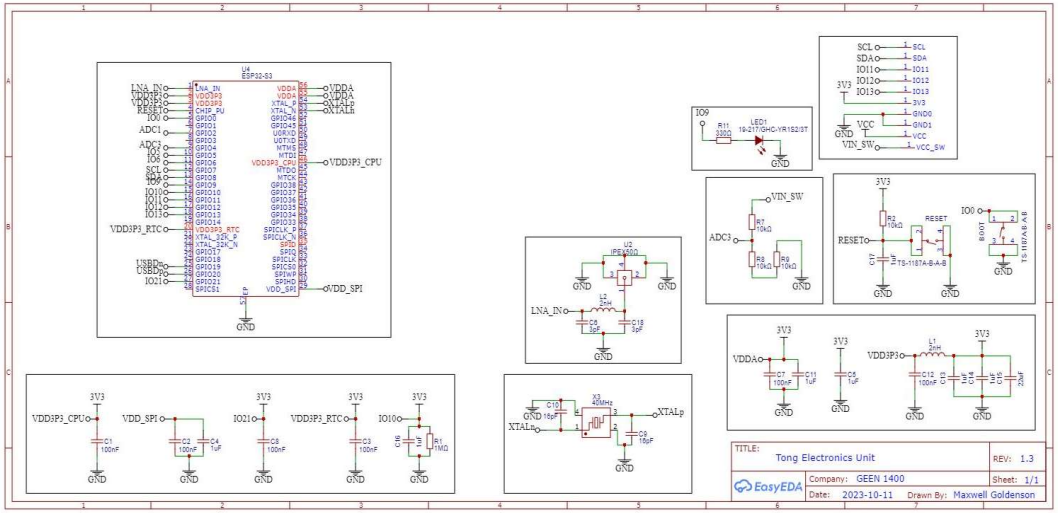
- *Dual-Core 240Mhz ESP-32-S3 Processor*
  - *Custom RF Circuit*
- *WIfi / BLE Capabilities*
  - *Not Yet Implemented*
- *Ultra-Low Power Consumption*
  - ***30-Day Battery Life***
  - *Auto Wakeup Circuit*
- *Battery Management*
  - *Smart Voltage Monitoring*
  - *Temperature Shut-Off*
  - *2200mah Li-iON Battery*
- *Magnetic Quadric Encoder*
  - *Accurate to 0.1 Degrees*
- *Motion Sensor*
  - *MPU-6050 ACCEL / GYRO / TEMP*
  - *Feeds Motion Wake-Up Circuit*
- *OLED Monochrome Display*
- *Rumble Feedback Motor*
- *Piezo-Electric Buzzer*