Electrical Breakdown

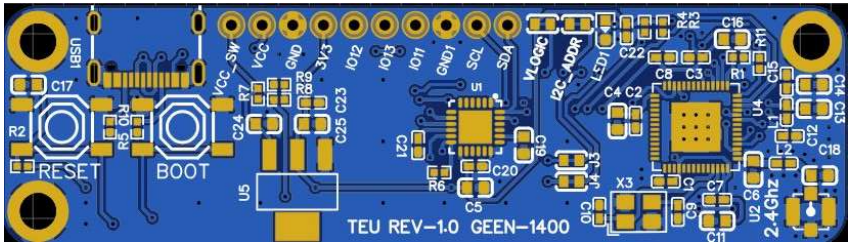

Tong Electronics Unit (TEU) Features:

- *Dual-Core 240Mhz ESP-32-S3 Processor*
  - *Custom RF Circuit*
- *WIfi / BLE Capabilities*
  - *Not Yet Implemented*
- *Ultra-Low Power Consumption*
  - ***30-Day Battery Life***
  - *Auto Wakeup Circuit*
- *Battery Management*
  - *Smart Voltage Monitoring*
  - *Temperature Shut-Off*
  - *2200mah Li-iON Battery*
- *Magnetic Quadric Encoder*
  - *Accurate to 0.1 Degrees*
- *Motion Sensor*
  - *MPU-6050 ACCEL / GYRO / TEMP*
  - *Feeds Motion Wake-Up Circuit*
- *OLED Monochrome Display*
- *Rumble Feedback Motor*
- *Piezo-Electric Buzzer*

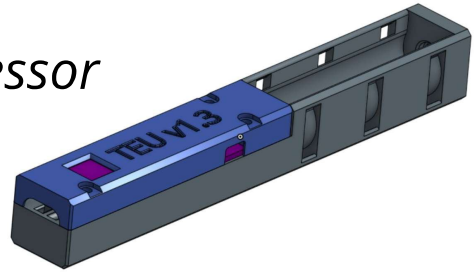

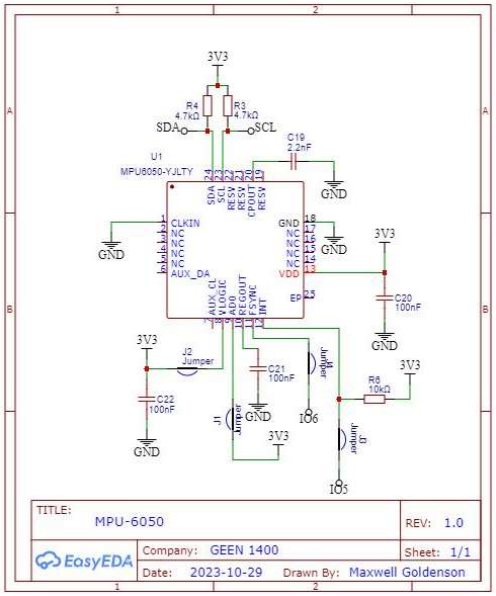

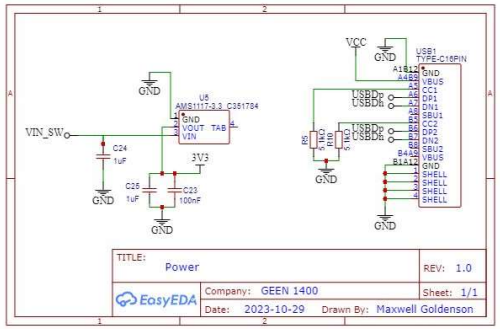

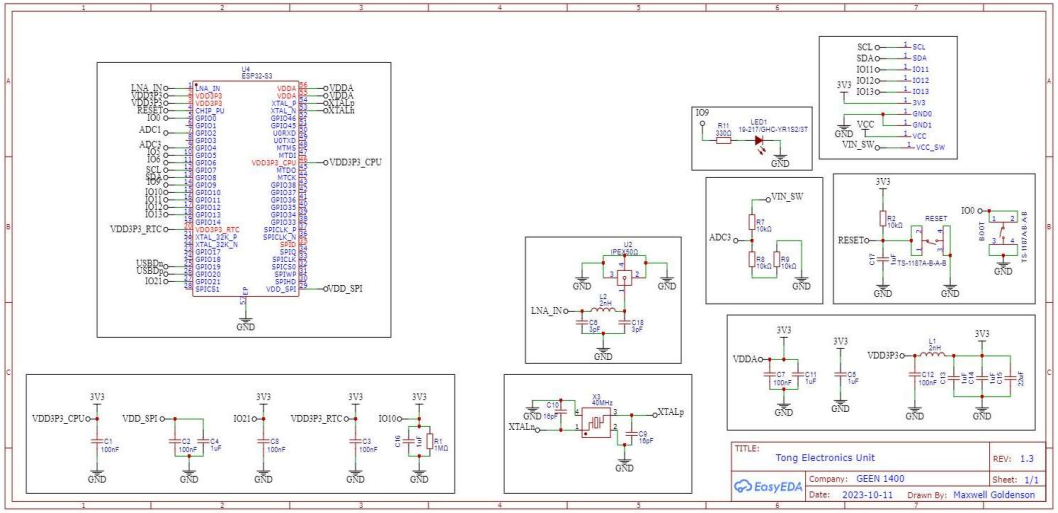

Software Breakdown
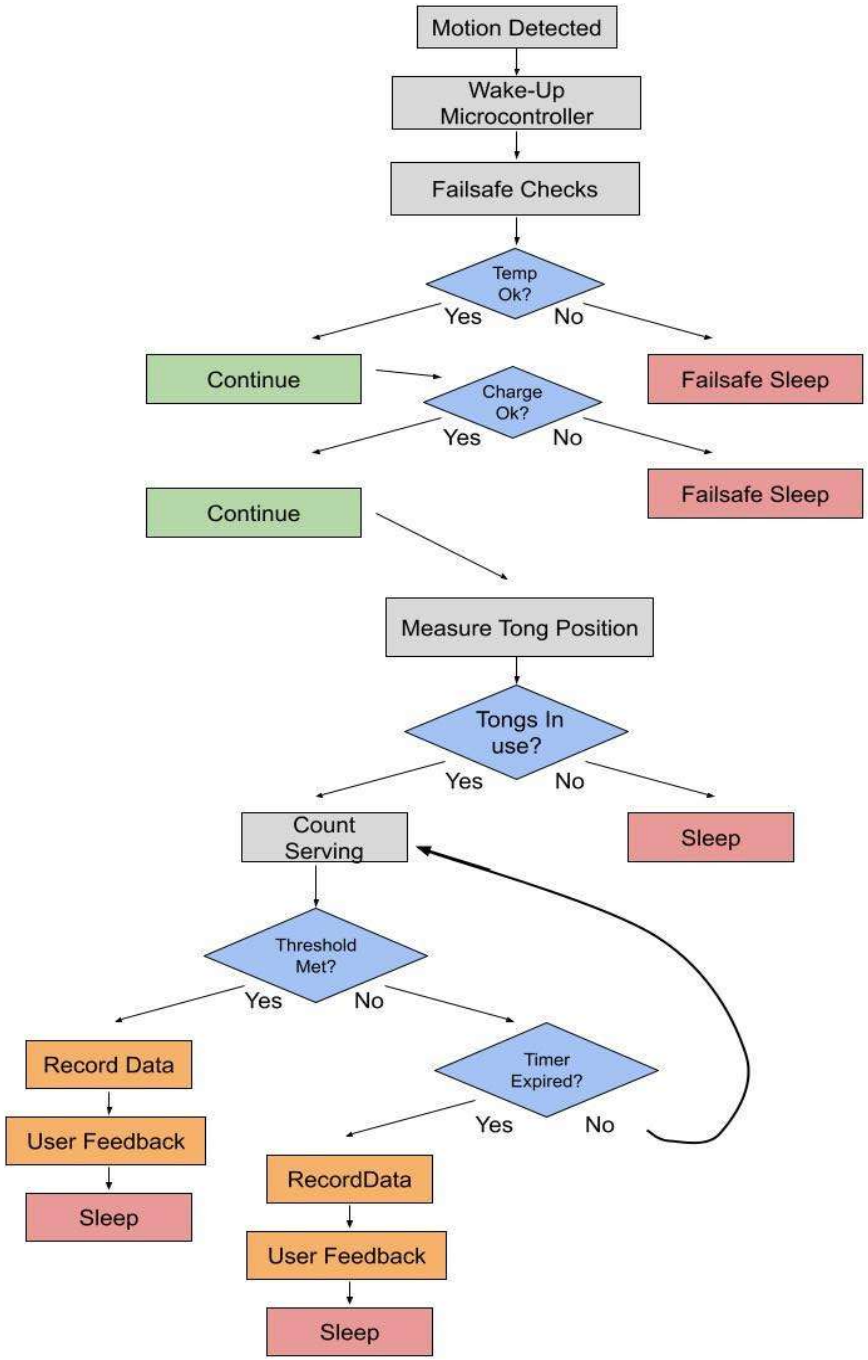
- *Serving Detection Algorithm*
  - *Detects User Consumption*
  - *Tracks Position and Velocity*
- *User Feedback*
  - *OLED Monochrome Display*
  - *Buzzer*
  - *Rumble Motor*
- *Auto-Wakeup Software*
  - *Features an Accelerometer and Deep sleep mode*
  - *Interrupt based Wake Up Call*
  - *Shuts off Power to Unused Sensors*
- *UltraLow Power Consumption*
  - *5-mah Sleep, 25-mah Awake (@3V3)*
- *Thermal, Voltage, and Time Failsafe*
  - *Measures Battery Voltage and Temp*
  - *Enters Panic Mode and Cuts Power*
  - *Sleeps after inactivity*
- *Filtered Angle Data*
  - *Moving Average Filter*
- *Non-Blocking Software Structure*
  - *Logic Used In Place Of Delays*
- *High Accuracy Angle Measurement*
  - *Accurate to 0.1 Degrees*